Bluetooth® low energy Module

Bluetooth® 4.2 low energy

EYSGJNAWY-WX

Brief Data Report

The ***Bluetooth***® word mark and logos are owned by the ***Bluetooth*** SIG, Inc. and any use of such marks by TAIYO YUDEN CO., LTD. is under license.

TAIYO YUDEN

Document constituent list

Control name	Control No.	Document Page
General Items	HD-AG-A150123	1/5 - 5/5
Absolute maximum ratings	HD-AM-A150123	1/1
Electrical characteristics	HD-AE-A150123	1/2 - 2/2
Circuit schematic	HD-MC-A150123	1/3 - 3/3
Outline / Appearance	HD-AD-A150123	1/1
Pin Layout	HD-BA-A150123	1/1
Handling Precaution	HQ-BA-537	1/2 - 2/2
Packaging Specification	HD-BB-A150123	1/3 - 3/3
Antenna application note		1/2 - 2/2
Design guide		1/1
Software Manual		1/17 - 17/17

Revision History

09-Dec.-2016 > Ver.1.0 Release

06-Feb.-2017 > Ver.1.1 Release

ATTENTION: This module has an API (Application Programming Interface) Specification that is under Japan export control. Depending on the customer's country and application (e.g. weapons), Taiyo Yuden may not be able to provide the API Specification to all customers. Please contact your local Taiyo Yuden sales office for additional information.

To contact your local sales office and for additional product information, please visit http://www.ty-top.com

Control No.	Control name
HD-AG-A150123 (1/5)	General Items

Scope
This specification ("Specification") applies to the hybrid IC "EYSGJNAWY-WX", a ***Bluetooth***® 4.2 low energy module ("Product") manufactured by TAIYO YUDEN Co., Ltd. ("TAIYO YUDEN")

1. Type: EYSGJN
   User Code: EYSGJNAWY-WX
   *User Code may be changed for mass production or other cases.

2. Function:
   Radio frequency module. ***Bluetooth***® standard Ver 4.2 low energy conformity

3. Application: Health & Fitness Equipment, Sensor, Toys

4. Structure:
   Hybrid IC loaded with silicon monolithic semiconductor
   Compatible with industrial standard reflow profile for Pb-free solders
   Can meet with RoHS compliance (Pb, Cd, Hg, Cr^{+6}, PBB, PBDE)

5. Outline: 11.3 x 5.1 x 1.3 mm
   28-pin Land Grid Array

6. Marking: Part number, Lot number

7. Features:
   - Small outline by PCB substrate
   - Low power consumption
   - Integrated antenna
   - Integrated system clock
   - ***Bluetooth***® 4.2 low energy conformity
     - Slave or Master Role

8. Packaging:
   Packaging method: Tape & reel + aluminum moisture barrier bag
   Packaging unit: 2000
   *It might be provided as tray at sample stage.

Control No.	Control name
HD-AG-A150123 (2/5)	General Items

9. Note:
   a. Any question arising from this Specification shall be solved through mutual discussion by the parties hereof.
   b. This Product is not designed to be radiation durable and should not be used under the circumstance of radiation.
   c. The operating conditions of this Product are as shown in this Specification. Please note that TAIYO YUDEN shall not be liable for a failure and/or abnormality which is caused by use under the conditions other than the operating conditions hereof.
   d. The Product mentioned in this Specification is manufactured for use in Health & Fitness Equipment, Sensor and Toys. Before using this Product in any special equipment (such as medical equipment, space equipment, air craft, disaster prevention equipment), where higher safety and reliability are duly required, the applicability and suitability of this Product must be fully evaluated by the customer at its sole risk to ensure correct and safe operation of these special equipments. Also, evaluation of the safety function of this Product even for use in general electronics equipment shall be thoroughly made and when necessary, a protective circuit shall be added during the design stage, all at the customer's sole risk.
   e. a) You are requested to fully check and confirm by the start of mass production of this Product that (1) no bug, defect or other failure is included in firmware incorporated in this Product ("Incorporated Software"), (2) no bug defect or other failure arising from installation of this Product in which is contained Incorporated Software into your products is included in Incorporated Software, and that Incorporated Software fully meets your intended use, although TAIYO YUDEN sufficiently inspects or verifies quality of Incorporated Software.
      b) Please note that TAIYO YUDEN is not responsible for any failure arising out of bugs or defects in Incorporated Software.
   f. TAIYO YUDEN warrants only that this Product is in conformity with this Specification for one year after purchase and shall in no event give any other warranty.
   g. Communication between this Product and others might not be established nor maintained depending on radio environment or operating conditions of this Product and other *Bluetooth*® products.
   h. In order to test for Radio Law certification with a device incorporating this module, the Host Software must be able to put the module into test mode. Please contact TAIYO YUDEN for further details.
   i. This Product operates in the unlicensed ISM band at 2.4GHz. In case this Product is used around the other wireless devices which operate in same frequency band of this Product, there is a possibility that interference may occur between this Product and such other devices. If such interference occurs, please stop the operation of other devices or relocate this Product before using this Product or do not use this Product around the other wireless devices.
   j. Please thoroughly evaluate our module with your products before going mass production.
   k. User Code Modification Notice.
      User Code for sample modules or part numbers in this Specification are TAIYO YUDEN standard part numbers. When any modification is made to a module to meet requested specifications, the part number will be changed. Please contact TAIYO YUDEN to confirm whether your part number needs to be modified.
      Please see the following examples for cases when part numbers are modified:
      - for specific firmware version (our standard item firmware will be upgraded occasionally)
      - for other relevant cases (specific or different setting, form, sizes, or display etc..)

Control No.	Control name
HD-AG-A150123 (3/5)	General Items

l. Alternative components may used to this module. The intended components is used within the warranty written in this document (characteristics, size, operating condition, reliability, public regulation such as radio type approval) and Taiyo Yuden confirmed there are not any problems with the replacement. The traceability of the components is secured each production lot.

m. Caution for Export Control

This Product may be subject to governmental approvals, consents, licenses, authorizations, declarations, filings, and registrations for export or re-export of the Product, required by Japanese Foreign Exchange and Foreign Trade Law (including related laws and regulations) and/or any other country's applicable laws or regulations related to export control.

If you plan to export or re-export this Product, it is strongly recommended that you check and confirm, the necessary procedures to export or re-export of this Product as required by applicable laws and regulations, and if necessary, you have to obtain necessary and appropriate approvals or licenses from governmental authority at your own risk and expense.

n. Japan Regulatory Information

This module is approved with the specific antenna on this module.

a) Please ensure that your product can bear a label with the following information. If the product is so small that it is not practicable to place the label, please place it in the instruction manual and package. The mark diameter shall be equal or grater than 3mm.

This product installs a radio system which has been approved as a radio station in a low power data communication system based on the Radio Law.
EYSGJN : 001-A05676

.

R 001-A05676

o. Canada Regulatory Information

a) This device complies with Industry Canada license-exempt RSS standards. Operation is subject to the following two conditions: (1) this device may not cause interference, and (2) this device must accept any interference, including interference that may cause undesired operation of the device.
L'utilisation de ce dispositif est autorisée seulement aux conditions suivantes: (1) il ne doit pas produire de brouillage et (2) l'utilisateur du dispositif doit être prêt à accepter tout brouillage radioélectrique reçu, même si ce brouillage est susceptible de compromettre le fonctionnement du dispositif.

b) This product is certified as type of the portable device with Industry Canada Rules. To maintain compliance with RF Exposure requirement,please use within specification of this product.
Ce produit est certifié comme type de l'appareil portable avec Industrie Règles de Canada. Pour maintenir l'acquiescement avec exigence Exposition de RF, veuillez utiliser dans spécification de ce produit.
- IC: 4389B-EYSGJN
-FVIN : F1

c) Please notify certified ID by either one of the following method on your product.
Specifiez ID certifiée dans votre produit par une de méthode suivante.
-Contains Transmitter module IC : 4389B-EYSGJN
-Contains IC : 4389B-EYSGJN

Control No.	Control name
HD-AG-A150123 (4/5)	General Items

p. FCC Regulatory Information

a) This device complies with part 15 of the FCC Rules. Operation is subject to the following two conditions: (1) This device may not cause harmful interference, and (2) this device must accept any interference received, including interference that may cause undesired operation.

b) Please notify certified ID by either one of the following method on your product.
-Contains Transmitter Module FCC ID: RYYEYSGJN
-Contains FCC ID: RYYEYSGJN

c) CAUTION: changes or modifications not expressly approved by the party responsible for compliance could void the use's authority to operate the equipment.

d) This product is certified as type of the portable device with FCC Rules. To maintain compliance with RF Exposure requirement, please use within specification of this product.

e) The antenna used for this transmitter must not be co-located or operating in conjunction with any other antenna or transmitter.

q. CE Regulatory Information

a) When your end product installs this module, it is required to proceed additional certification processes before placing on the market in EU member states to make your products fully comply with relative EU standards.

b) TAIYO YUDEN can provide you the test reports of conducted measurement portion for the radio module. You can utilize the test reports for the certification processes of your end product as it requires radio testing.

r. This Product is designed for use in products which comply with *Bluetooth*® Specifications (Ver 4.2 LE) ("Bluetooth Specifications"). TAIYO YUDEN disclaims and is not responsible for any liability concerning infringement by this Product under any intellectual property right owned by third party in case the customer uses this Product in any product which does not comply with Bluetooth Specifications (the "non-complying products"). Furthermore, TAIYO YUDEN warrants only that this Product complies with this Specification and does not grant any other warranty including warranty for application of the non-complying products.

s. EYSGJN series module is qualified as PHY only with Component category by Bluetooth SIG. The QDID of this module is 69825.The final product needs to get qualification as End product combining with PHY (module), SoftDevice and Profile before selling the product. The QDID of this product is Link Layer Master : 54056, Slave : 61110 and Host Layer Master : 66320, Slave : 56948. Please refer to following combination and consult with your qualification body and BQE.

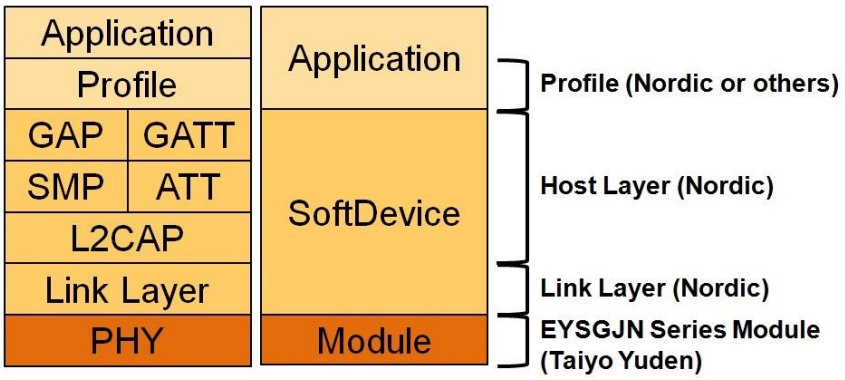

Control No.	Control name
HD-AG-A150123 (5/5)	General Items

The use of Embedded Software
Before using this product.

Please kindly read carefully and understand the following before using the Products.

1. Taiyo Yuden Co., Ltd. (hereinafter “TY”), lawfully has copyrights and other rights to the software embedded to the memory of the Products (the “Embedded Software”). Except as otherwise expressly provided herein, your company is not permitted to disclose or offer the Embedded Software, either wholly or partly, to any third party (including uploading to your company or third party (ies)’s web sites and downloading by third parties from such sites), nor to copy, revise, reverse engineer, upgrade, make specification change, or alienate the Embedded Software.
2. Before using the Products, you need to check and confirm sufficient safety and operation of your products which incorporate the Products and interoperability and compatibility with other Bluetooth® enabled products.
3. TY have not evaluated and confirmed the interoperability, compatibility, etc. of the Products (including Embedded Software) with every kind of Bluetooth® enabled product. In addition, TY does not guarantee interoperability and compatibility of the Product with certain devices. In order to minimize the damage or harm arising out of the Potential Failure or out of combination with other devices, TY recommend your company set up interface or external pin (for detail, please refer to Specification “ Pin Layout ” of this document) for rewriting the Embedded Software.

Control No.	Control name
HD-AM-A150123 (1/1)	Absolute maximum ratings

Absolute maximum ratings

Symbol	Parameter	Min.	Max.	Units
VCC_NRF		-0.3	+3.6	V
GND			0	V
VIO		-0.3	VCC_NRF+ 0.3	V
Storage temperature		-40	+85	Deg-C
MSL	Moisture Sensitivity Level	3		
ESD HBM	Human Body Model		1	kV
ESD MM	Machine Model		100	V
Endurance	Flash Memory Endurance	20000		write/erase cycles
Retention	Flash Memory Retention	10 years		At 40 deg-C
Number of times an address can be written between erase cycles			2	times

Control No.	Control name
HD-AE-A150123 (1/2)	Electrical characteristics

Electrical characteristics

Recommendation operating range

Symbol	Parameter	Min.	Typ.	Max.	Units
VCC_NRF	Supply voltage, normal mode	1.8	3.0	3.6	V
tR_VCC_NRF	Supply rise time (0V to 1.8V)*1			100	ms
TA	Operation temperature	-25	25	75	Deg-C

*1 The on-chip power-on reset circuitry may not function properly for rise times outside the specified interval. Also after power off, it must start up from below 0.3V. The on-chip power-on reset circuitry may not function properly.

DC Specifications

The Specification applies for Topr.= 25 degrees C, VCC_NRF = 3.0V

Symbol	Parameter (condition)	Min.	Typ.	Max.	Units
VIH	Input high voltage	0.7 VCC_NRF		VCC_NRF	V
VIL	Input low voltage	GND		0.3 VCC_NRF	V
VOH	Output high voltage (std. drive, 0.5 mA)	VCC_NRF-0.3		VCC_NRF	V
VOH	Output high voltage (high-drive, 5 mA)	VCC_NRF-0.3		VCC_NRF	V
VOL	Output low voltage (std. drive, 0.5 mA)	GND		0.3	V
VOL	Output low voltage (high-drive, 5 mA)	GND		0.3	V
RPU	Pull-up resistance	11	13	16	kohm
RPD	Pull-down resistance	11	13	16	kohm
ITX,+4dBm	TX only run current @ POUT =+4 dBm		16		mA
IRX	RX only run current		13		mA
RSTR	RESET High to Module Ready		300	600	ms
RPW	RESET Pulse Width		5		ms

UART specifications

Symbol	Description	Min.	Typ.	Max.	Units
f_{UART}	Baud rate for UART		9600		bps

Control No.	Control name
HD-AE-A150123 (2/2)	Electrical characteristics

RF Specifications

Symbol	Description	Min.	Typ.	Max.	Units
Fop	Operating frequencies	2402		2480	MHz
Df	Frequency deviation	+/-225	+/-250	+/-275	kHz
P_{RF}	Maximum output power		4		dBm
PRFCR	RF power accuracy			+/-4	dB
P_{BW}	20 dB bandwidth for modulated carrier		950	1100	kHz
P_{RF1}	1st Adjacent Channel Transmit Power 1 MHz			-20	dBc
P_{RF2}	2nd Adjacent Channel Transmit Power 2 MHz			-45	dBc
PRX_{MAX}	Maximum received signal strength at < 0.1% PER		0		dBm
P_{SENS} IT	Receiver sensitivity (0.1% BER) Ideal transmitter		-93		dBm
P_{SENS} DT	Receiver sensitivity (0.1% BER) dirty transmitter		-91		dBm

Control No.	Control name
HD-MC-A150123 (1/3)	Circuit Schematic

Block Diagram

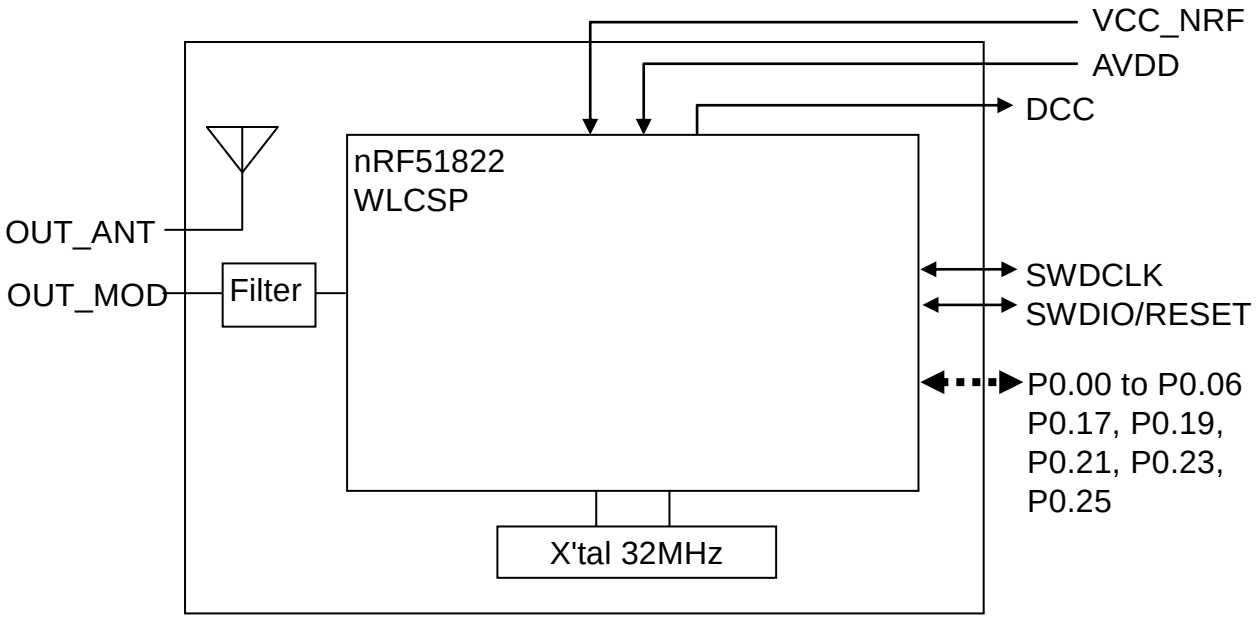

Control No.	Control name
HD-MC-A150123 (2/3)	Circuit Schematic

Sample circuits

Internal LDO setup

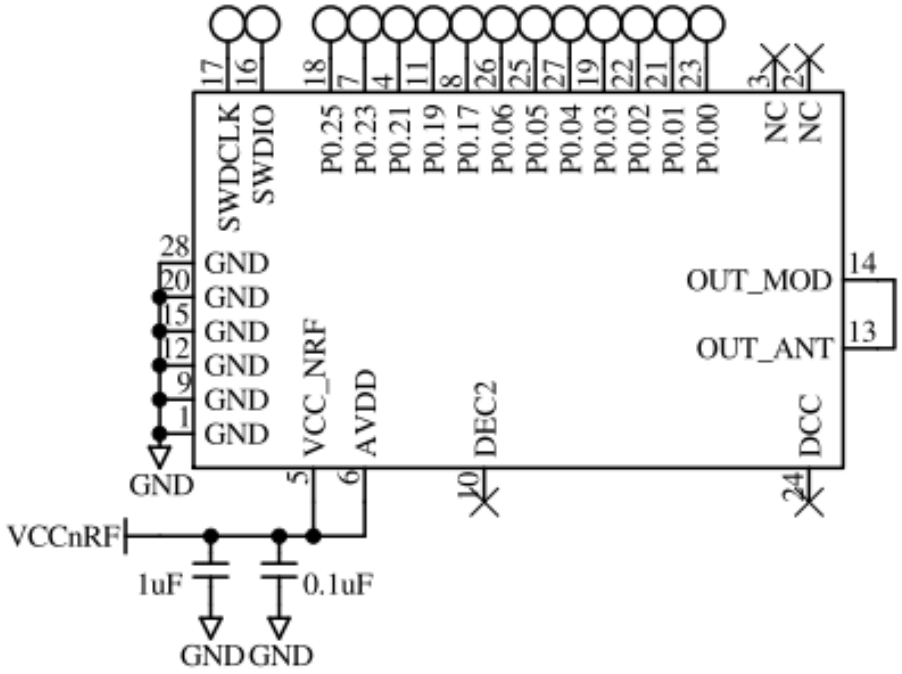

DC/DC converter setup

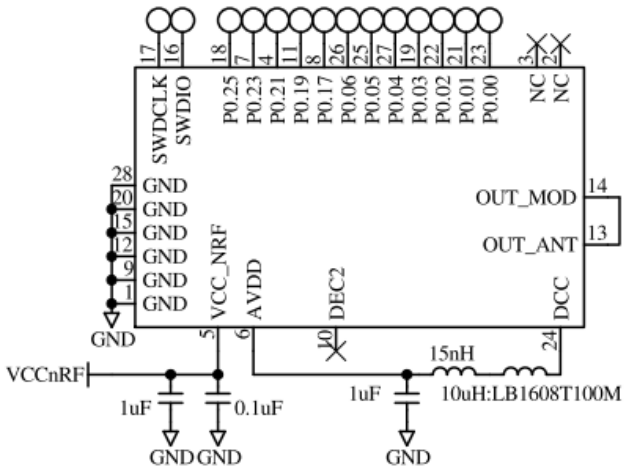

Low voltage mode setup

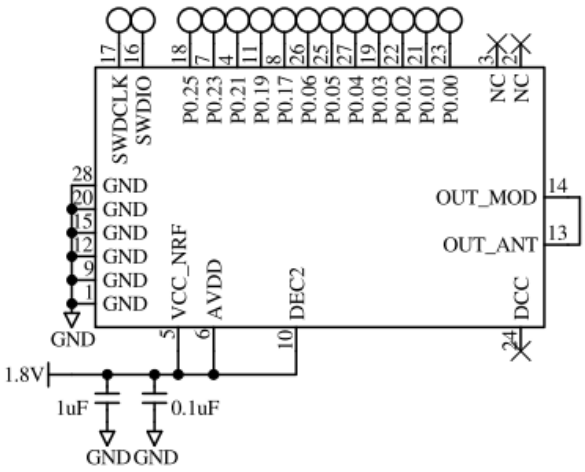

Control No.	Control name
HD-MC-A150123 (3/3)	Circuit Schematic

Reference Circuits

SWDIO is also system reset (active low).

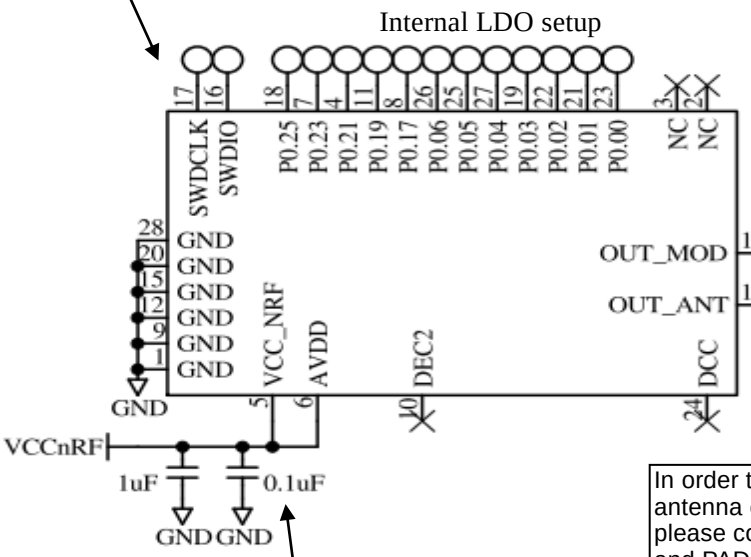

In order to use the built-in antenna on the module, please connect PAD13 and PAD14 as short as possible.

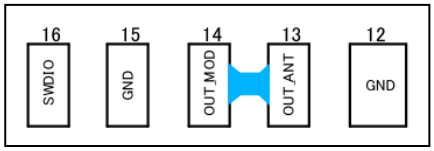

In case of the operation with the battery, we recommend that you add a capacitor of about 100uF in view of the voltage drop during TX/RX.
In case of the power supply voltage fluctuation by the load change is large, the module may not function properly.
If an external regulator is used, the load change characteristic should be good in order to keep stable voltage as possible when the current is change.

Control No.	Control name
HD-AD-A150123 (1/1)	Outline/Appearance

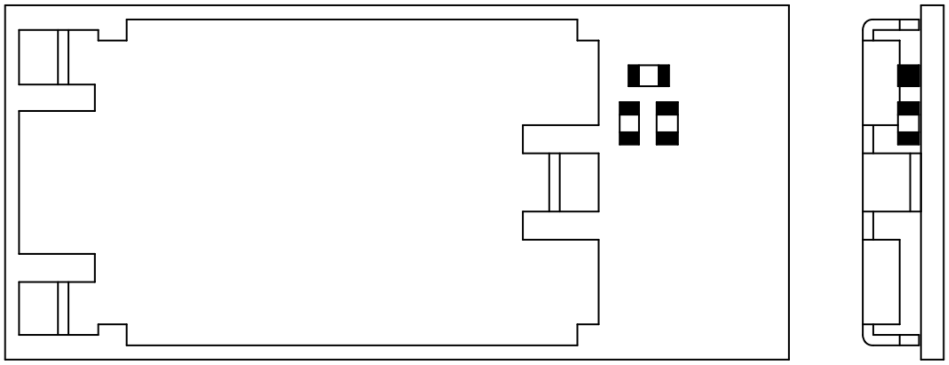

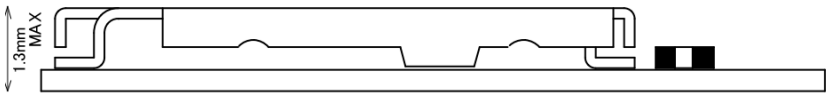

Tolerance: +/- 0.2mm
Unit : (mm)

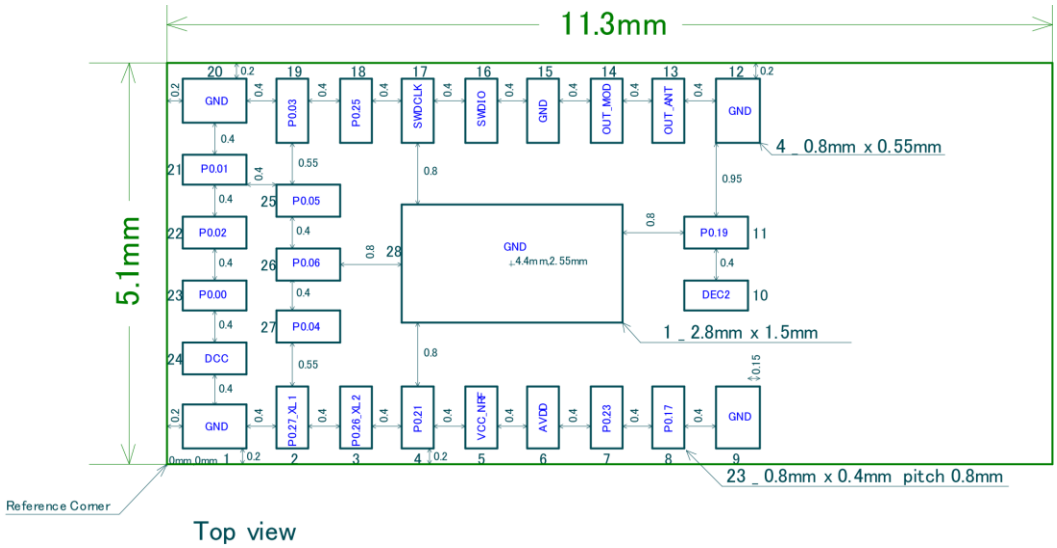

Top view

The dimension of the land pattern is the same as a foot pattern.

Recommended metal mask for solder printing

Pad size	Metal mask opening
Signal pad 23 – 0.4 x 0.8 mm	0.35 x 0.7 mm
Corner pad 4 – 0.55 x 0.8 mm	0.45 x 0.75 mm
Center pad 1 – 2.8 x 1.5 mm	1.1 x 1.2 mm x 2

The metal mask thickness: t=0.1mm

Center pad

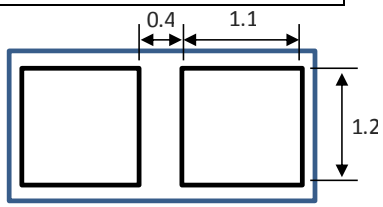

Control No.	Control name
HD-BA-A150123 (1/1)	Pin Layout

Pin Descriptions

Pin	Pin name	Pin function	Description
1	GND	Ground	Ground (0 V)
2	NC	Not Connected	Reserved
3	NC	Not Connected	Reserved
4	P0.21	Digital Input	Sleep indication of host / Resume from Power saving mode
5	VCC_NRF	Power	Power supply
6	AVDD	Power	Analog Power supply
7	P0.23	Digital Output	Mode indication of module
8	P0.17	Digital Input	Request DFU mode
9	GND	Ground	Ground (0 V)
10	DEC2	Power	Reserved
11	P0.19	Digital Output	State indication of module / DFU indication
12	GND	Ground	Ground (0 V)
13	OUT_ANT	Antenna In/Out	Internal antenna. It should be connected to Pin 14 OUT_MOD for normal operation.
14	OUT_MOD	RF In/Out	RF I/O pin. It should be connected to Pin 13 OUT_ANT for normal operation.
15	GND	Ground	Ground (0 V)
16	SWDIO	Digital I/O	System reset (active low). Also HW debug and flash programming I/O
17	SWDCLK	Digital input	HW debug and flash programming I/O
18	P0.25	Digital Output	Wake up request
19	P0.03	Digital input	UART_RX
20	GND	Ground	Ground (0 V)
21	P0.01	Digital Output	UART_TX
22	P0.02	Digital Input	UART_CTS
23	P0.00	Digital Output	UART_RTS
24	DCC	Power	Reserved
25	P0.05	Digital Output	Module active / sleep indicate
26	P0.06	Digital Input	Disconnect request / Resume from Power saving mode
27	P0.04	Digital Input	Forced initialize / Request Sleep mode
28	GND	Ground	Ground (0 V)

Control No.	Control name
HQ-BA-537 (1/2)	Handling Precaution

This specification describes desire and conditions especially for mounting.

Desire/Conditions

(1) Environment conditions for use and storage

1. Store the components in an environment of < **40deg-C/90％RH** if they are in a moisture barrier bag packed by TAIYO YUDEN.
2. Keep the factory ambient conditions at < **30deg-C/60％RH** .
3. Store the components in an environment of < **25±5deg-C/10%RH** after the bag is opened. (The condition is also applied to a stay in the manufacture process).

(2) Conditions for handling of products

Make sure all of the moisture barrier bags have no holes, cracks or damages at receiving. If an abnormality is found on the bag, its moisture level must be checked in accordance with 2 in (2).

Refer to the label on the bag.

1. All of the surface mounting process (reflow process) must be completed **in 12 months** from the bag sea date.
2. Make sure humidity in the bag is less than **10%RH** immediately after open, using a humidity indicator card sealed with the components.
3. **All** of the surface mounting process (reflow process including rework process) must be completed in **168 hours** after the bag is opened (inclusive of any other processes).
4. If any conditions in (1) or condition 2 and 3 in (2) are not met, bake the components in accordance with the conditions at **125deg-C 24hours**
5. As a rule, baking the components in accordance with conditions 4 in (2) shall be once.
6. Since semi-conductors are inside of the components, they must be free from static electricity while handled.(<100V) Use ESD protective floor mats, wrist straps, ESD protective footwear, air ionizers etc. , if necessary.
7. Please make sure that there are lessen mechanical vibration and shock for this module, and do not drop it.
8. Please recognize pads of back side at surface mount.
9. Washing the module is not recommended. If washing cannot be avoided, please test module functionality and performance after thoroughly drying the module. We cannot be held responsible for any failure due washing the module.
10. Please perform temperature conditions of module at reflow within the limits of the following.

Please give the number of times of reflow as a maximum of 2 times.

Control No.	Control name
HQ-BA-537 (2/2)	Handling Precaution

Recommented Reflow Profile

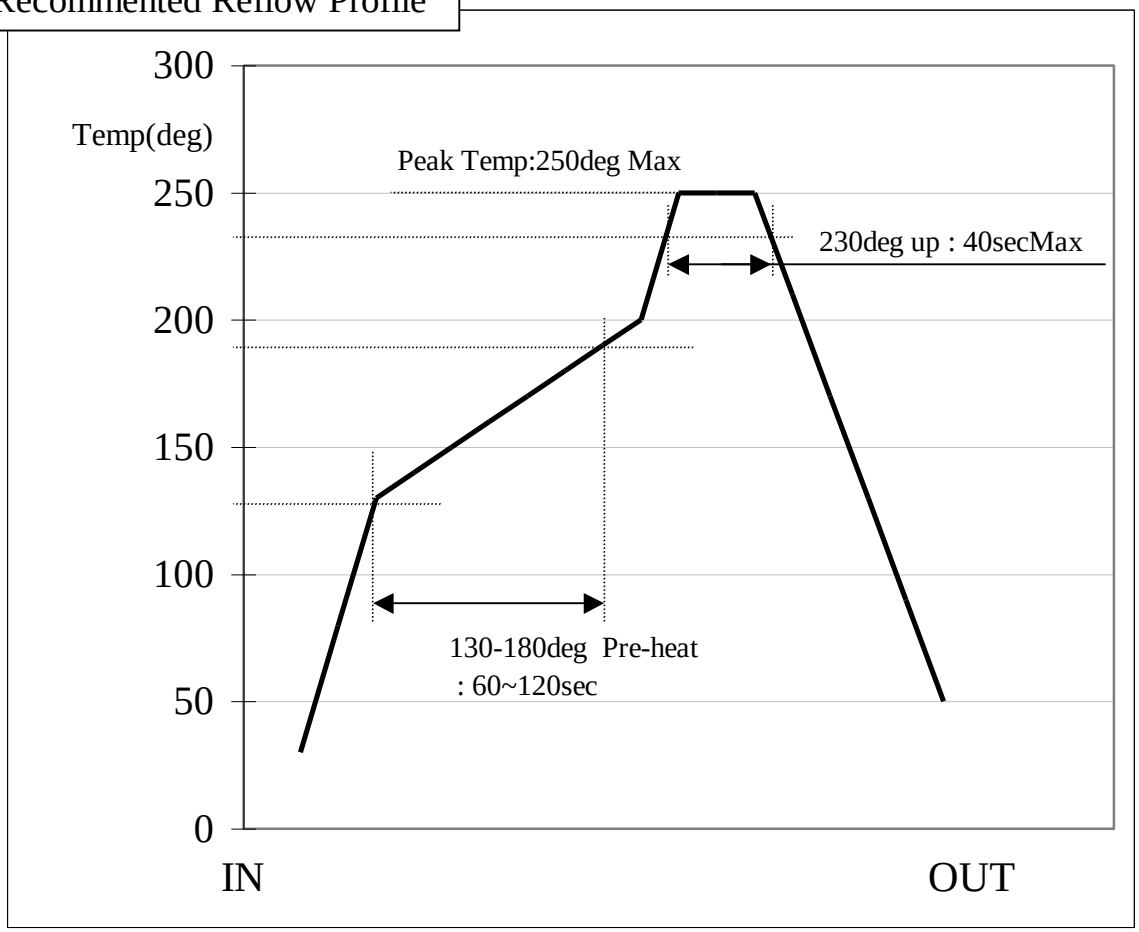

Control No.	Control name
HD-BB-A150123 (1/3)	Packaging Specification

Packaging Specification
梱包仕様

(1) Packaging Material 梱包材料

Name 部材名	Outline 概要	Materials 材質	Note 備考
Emboss エンボス	24mm wide - 12mmPitch 24mm幅 - 12mmピッチ	Conductive PS 導電性 PS	
Cover Tape カバーテープ			
Reel リール	φ330 mm	Conductive PS 導電性 PS	
Desiccant 乾燥剤	30g×1		
Humidity indicator card 湿度インジケータ			
Aluminum moisture barrier bag アルミ防湿袋	420×460(mm)	(AS)PET/AL/NY/PE(AS)	
Label ラベル			
Corrugated cardboard box(Inner) 個装箱	339×351×74(mm)		
Corrugated cardboard box(Outer) 外装箱	369×369×277(mm)		

(2) Packaging Unit
梱包数量
Max 2000 pieces/Reel
Max 6000 pieces/Box(Outer)

(3) Packaging Figure

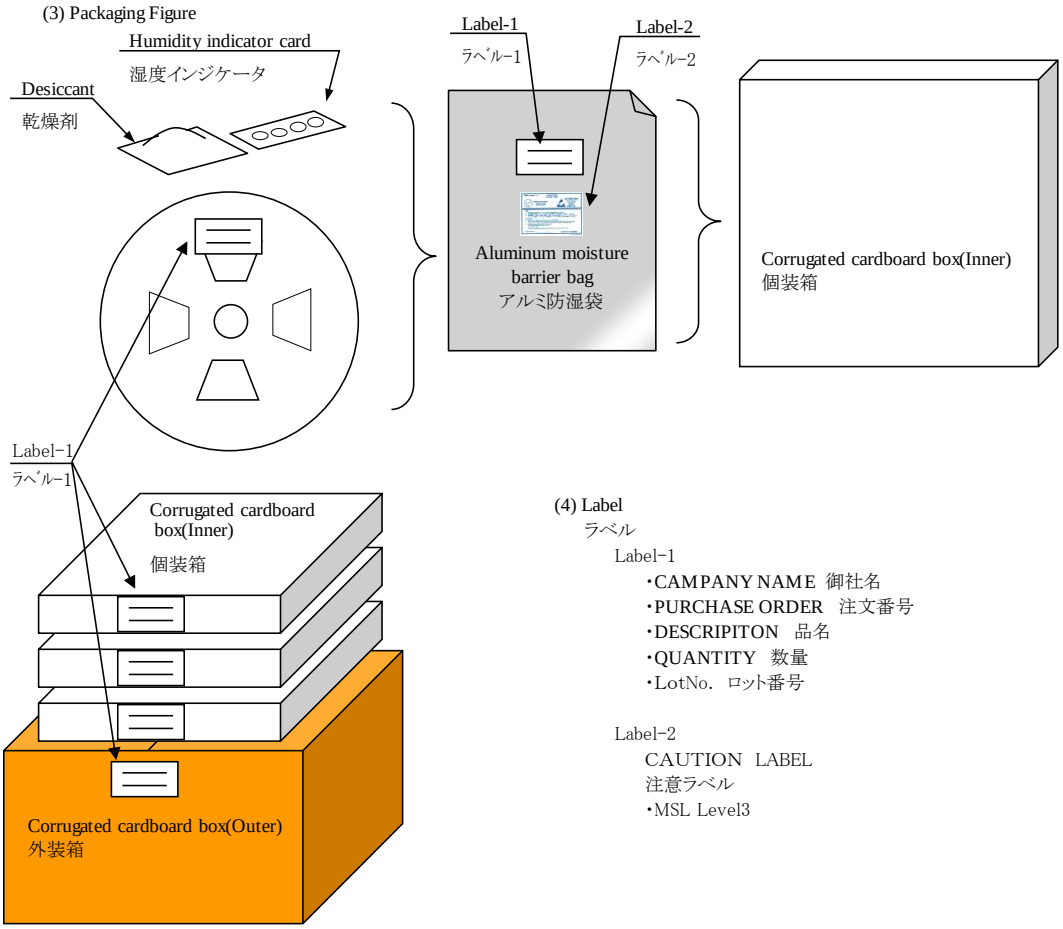

(4) Label
ラベル

Label-1
- CAMPANY NAME 御社名
- PURCHASE ORDER 注文番号
- DESCRIPITON 品名
- QUANTITY 数量
- LotNo. ロット番号

Label-2
CAUTION LABEL
注意ラベル
- MSL Level3

Control No.	Control name
HD-BB-A150123 (2/3)	Packaging Specification

Tape specification
テーピング仕様

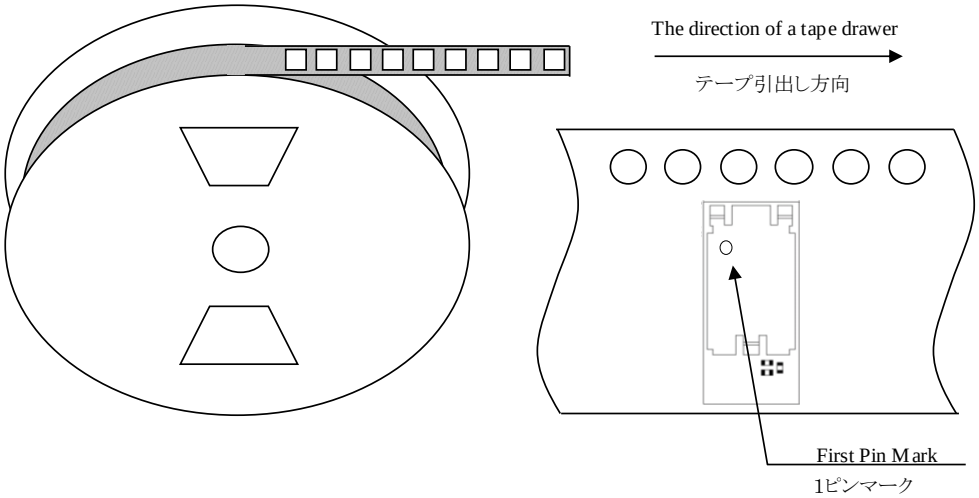

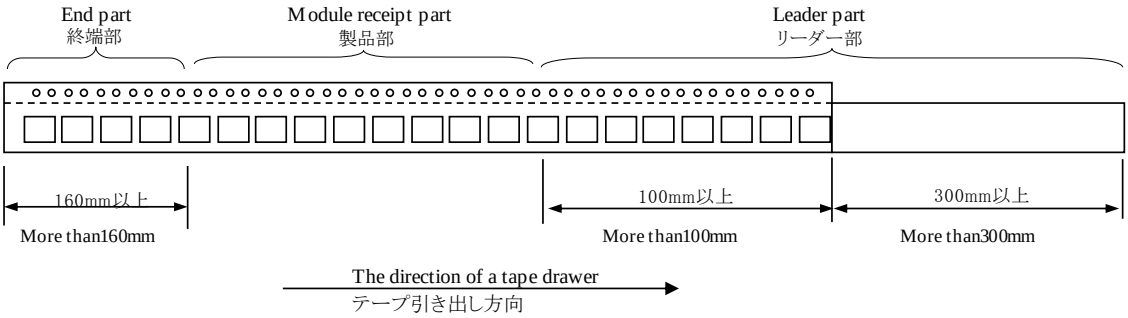

キャリアエンボス図面

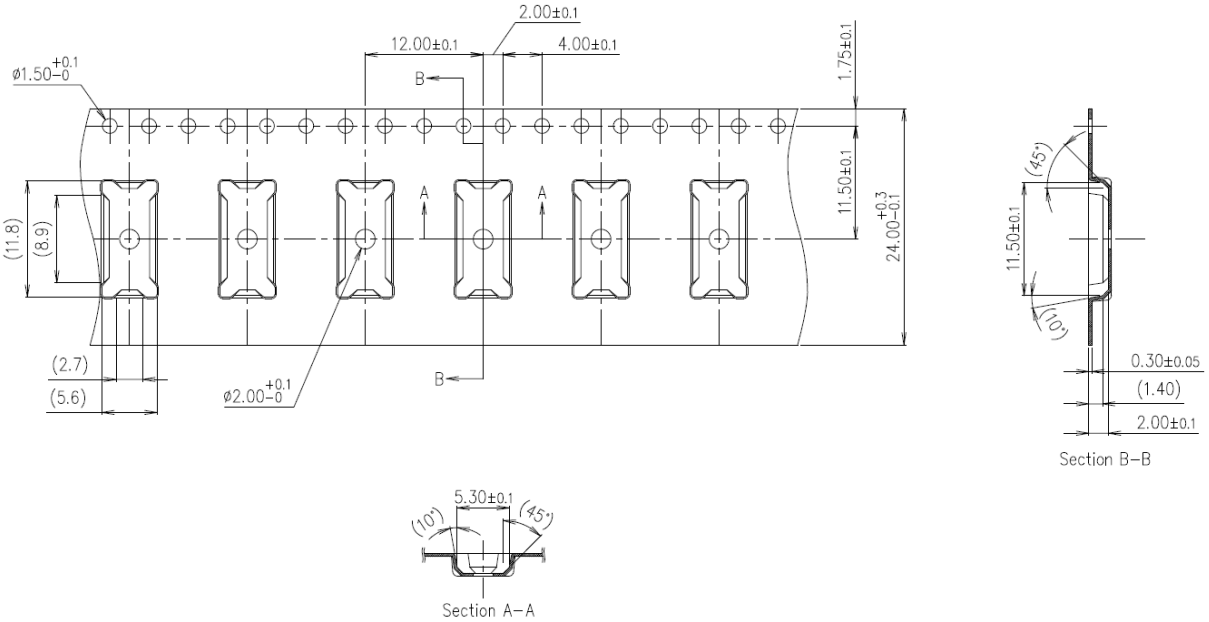

Control No.	Control name
HD-BB-A150123 (3/3)	Packaging Specification

Reel specification
リール仕様

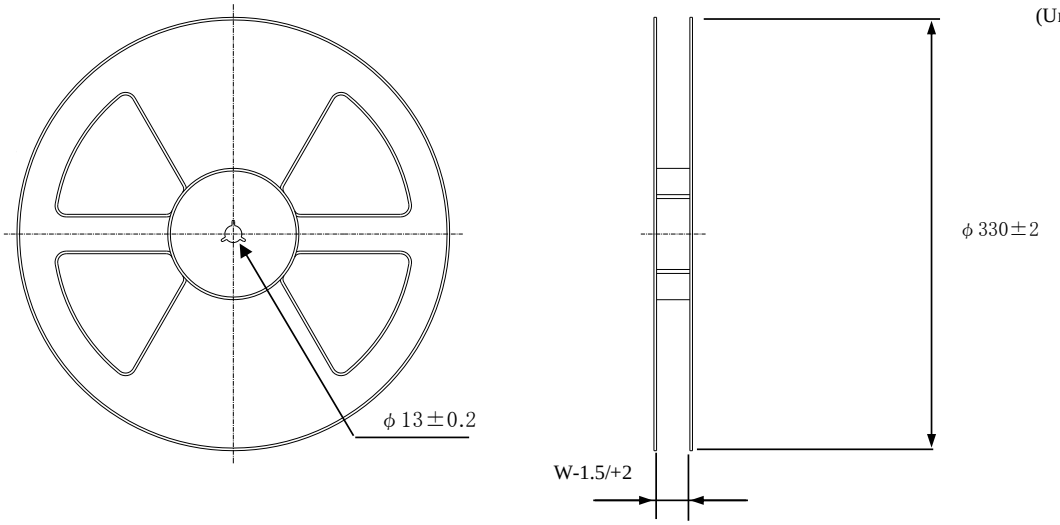

Tape wide	8mm	12mm	16mm	24mm	32mm	44mm
W	9.4mm	13.4mm	17.4mm	25.4mm	33.4mm	45.4mm

Taping performance
テーピング性能

Both of an embossing tape top cover tape bear this, when the power of 10N is applied in the direction of a drawer.
・エンボステープ、トップカバーテープともに、引き出し方向に10Nの力を加えた場合に、これに耐えうること.

The exfoliation adhesion of a top cover tape is the intensity of 0.1～1.3N.
(The angle to pull is 165～180 degrees. The speed to pull is 300 mm/min.)
・トップカバーテープの剥離強度は、角度165～180度に保ち、300mm/minのスピードでトップカバーテープを引っ張ったとき、0.1～1.3Nとする.

Note
備考

Lack of the parts in 1 reel is with two or less pieces.
1リール中の部品の欠落は2個までとします。(ラベル表示数量と梱包数は同じです。欠落とはテープ内でのモジュール抜けが2個まで許容させていただくという意味になります。)

MSL Level 3 Under control
MSL はレベル３で管理しています。

Control No. (1/2)	Control name Antenna application note

Recommended arrangement of the module

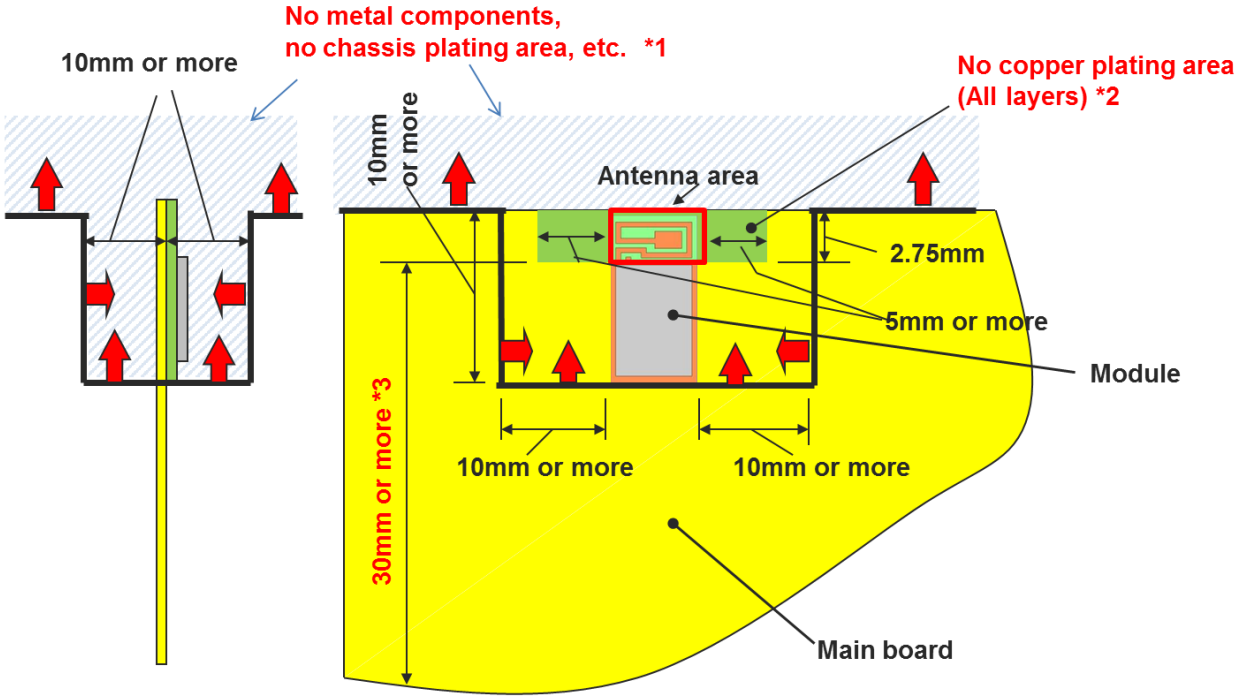

*1 Please do not place any metal components in blue shaded space,(*1) such as signal line and metal chassis as possible except for main board while mounting the components in *1 space on the main board is allowed except for no copper plating area. (*2).

*2 This area is routing prohibited area on the main board. Please do not place copper on any layer. Please remain use of FR-4 dielectric material. The antenna is tuned with the FR-4.

*3 Characteristics may deteriorate when GND pattern length is less than 30mm. It should be 30 mm or more as possible.Even when above mentioned condition is satisfied, communication performance may be significantly deteriorated depending on the structure of the product.

Control No. (2/2)	Control name Antenna application note

Example layout on main board

Antenna arrangement near resin

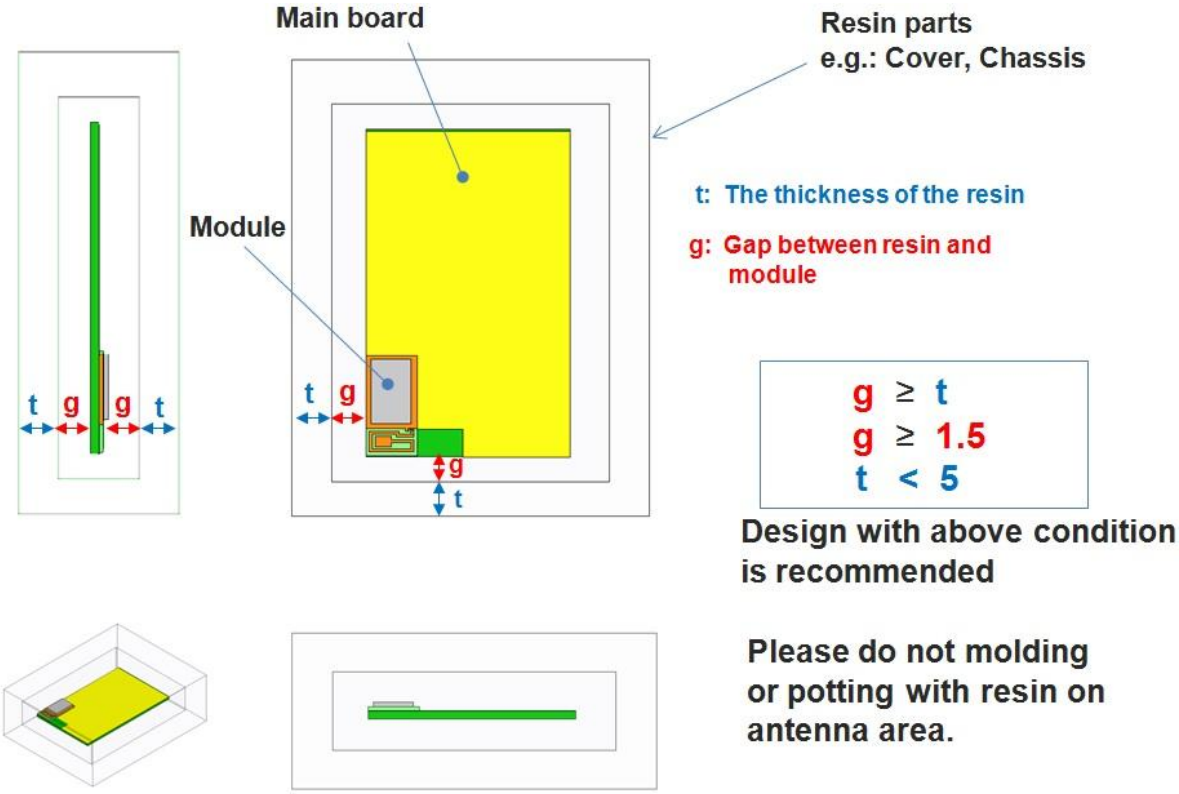

Control No. (1/1)	Control name Design guide

1. Power Up Sequence

VCC_NRF power supply rise time (0V to 1.8V) must not exceed 100ms.

2. Recommended Power Circuit

VCC_NRF is the main power supply (1.8 – 3.6V) for this module. The supply voltage range of VCC_NRF is 1.8V to 3.6V in LDO mode and 2.1V to 3.6V in DCDC mode. For more information of internal DC/DC converter operation, please refer to chapter 12.1.3 of "nRF51 _Series_Reference_Manual v3.0" by Nordic Semiconductor. In case of the power supply voltage fluctuation by the load change is large, the module may not function properly. If an external regulator is used, the load change characteristic should be good in order to keep stable voltage as possible when the current is change.

3. Battery operation

When using a small battery (e.g. CR2032), a large capacitor (e.g.100uF low leakage capacitor) should be placed near the battery. This will reduce the voltage drop especially when the module is operated at low temperatures

4. Pattern Design Guide

4-1. Power Supply System

Power supply bypass capacitors should be placed close to the VCC_NRF pin of the module. The VCC_NRF trace should be greater than 0.5mm and a bigger a via diameter is recommended.

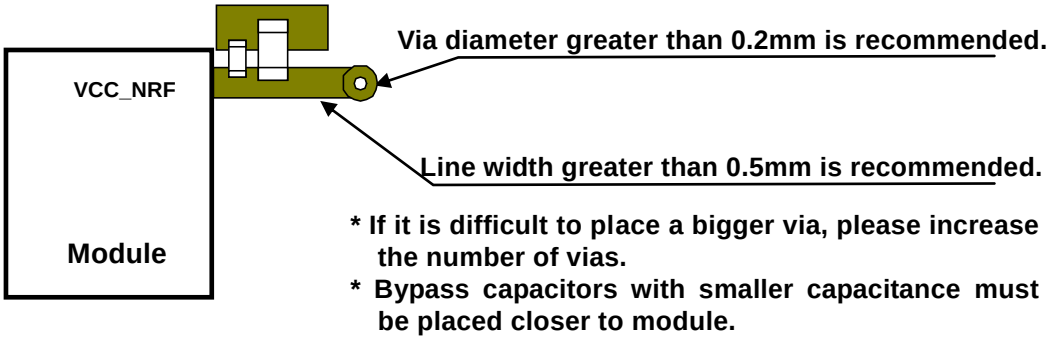

4-2. Bypass Capacitor Layout

A parallel combination of a small capacitance (about 10pF) and a large capacitance (1uF to 10uF) is recommended for bypass capacitors. The GND of the bypass capacitor should be placed close to an adjacent module GND to ensure the shortest closed loop.

4-3. GND Pattern

Power supply bypass capacitor GND should be placed in proximity of module GND. Wide GND area must be provided to ensure isolation for each layer.

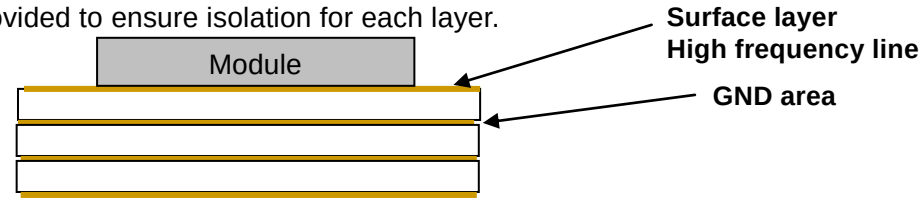

GND pattern of each layer should be connected to GND area with large number of via.

Revision History

Version	Date	Description
1.0.0	**2016/11/16**	Excerpted from Software manual part in Ver.1.01 (21-Dec.-2015) of Data Report for EYSGJNAWY-WX

Copyright Information:

- *Bluetooth*® Smart module Software -

This software is owned by TAIYO YUDEN CO., LTD.

You and your company shall conform following:

(1) The software image may not be made a copy from TAIYO YUDEN CO., LTD.'s module.
(2) The software image provided by TAIYO YUDEN CO., LTD. must not be loaded to another vendor's module or chipset, and can be copied only for backup.
(3) The software image may not be provided to anyone.
(4) The software image may not be analyzed by reverse engineering, decompile, and disassemble.

TAIYO YUDEN CO., LTD. is not responsible for any damage caused by this software.

Copyright Year 2015-

Firmware Version is Ver. 3.0.0

There is a possibility of changing a software specification.

1. Overview

This specification is for module based on TAIYO YUDEN original service. This specification will only define supporting point-to-point connections. This document is excerpted from Software manual part in Ver.1.01 (21-Dec.-2015) of Data Report for EYSGJNAWY-WX.

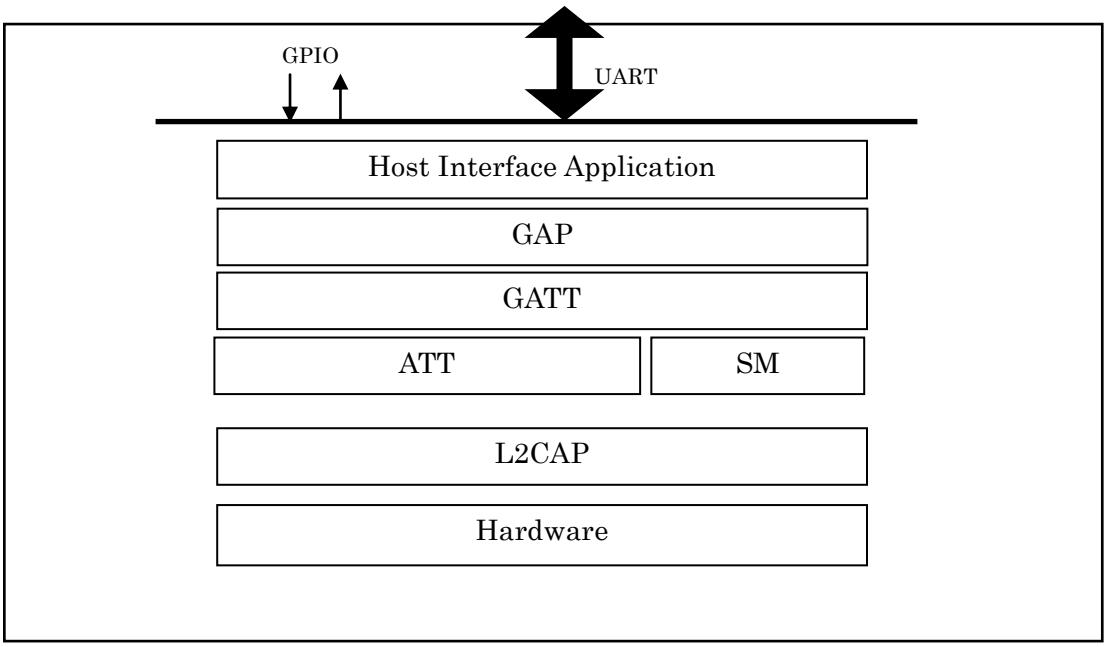

Software Block Diagram

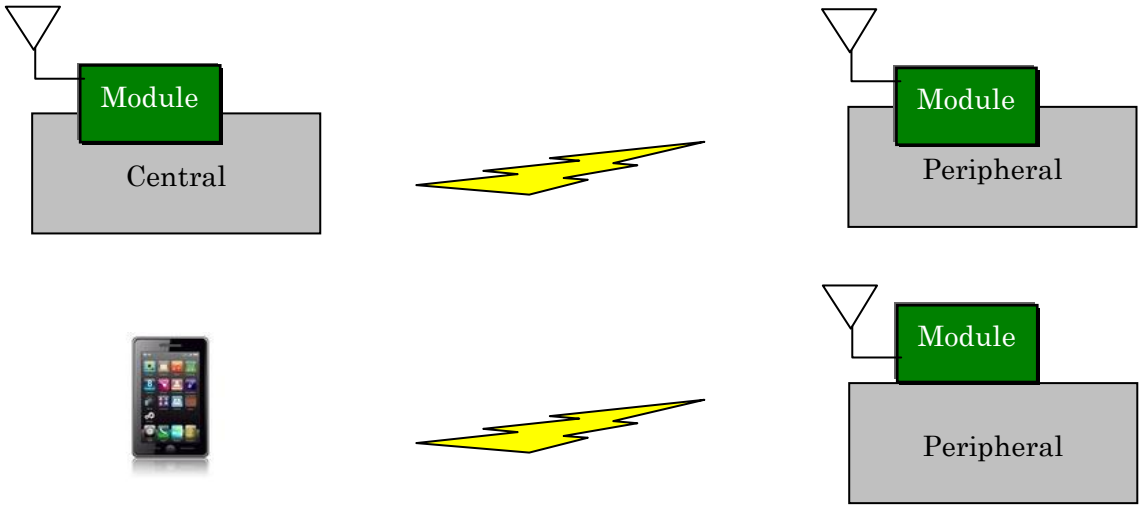

Usage Model

*** Only one-to-one connection supported.**

2. Basic software state diagram

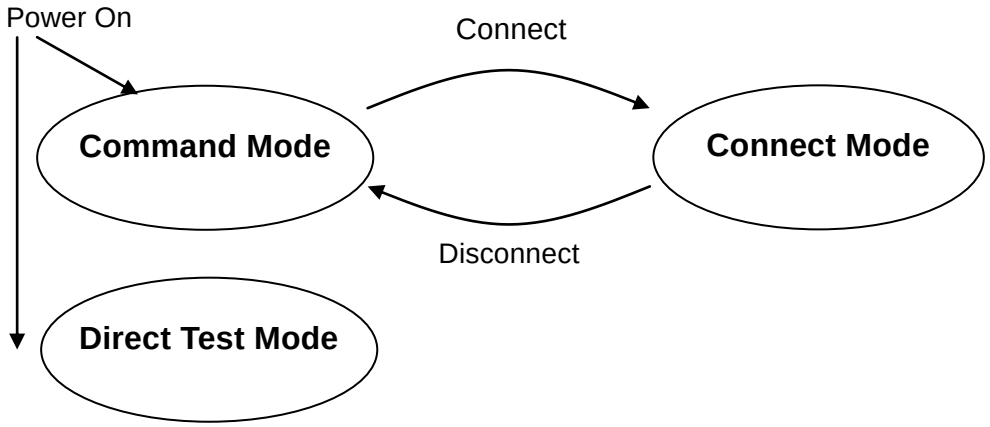

- **Command mode:**
  Module can only accept control commands in this mode.
- **Connect mode:**
  In this mode, module will transparently send and receive data. When disconnected, it will return to Command Mode.
- **Direct Test mode**
  RF PHY testing of *Bluetooth*® low energy devices.

3. Control Command Syntax

Control commands which the host sends are based on character strings that start with “B”(ASCII code: 0x42, 66 decimal), and that end with <CR><LF> (ASCII code: 0x0D 0x0A) (decimal values 13, 10).
Response event which host receives are started with <CR><LF> and ended <CR><LF>. Please note that this specification / application does not allow for multiple commands to be sent to the host. The application is not responsible for parsing of packets / command sequences.

Command Mode – Control Command:
“B”{*command characters*}[*Parameter1Parameter2:: Parameter(N)*]<CR><LF>

Response Event:
<CR><LF>{*event characters*}[*Parameter1Parameter2::Parameter(N)*]<CR><LF>

4. Peripheral

4.1 Command and Event List

4.1.1. Common Commands

Command Character	Function	Parameter	Response
Configuration These commands are available when advertising stopped.			
ST3	Set Local Device Name (MAX 16CHARACTERS)	Parameter: **Device_name**	Successful: ACK Failed: NAK##
ST5	Set PSKEY Value (Note Values 0 >= are valid) Example BST5030100 (set PSKEY 03 to 0x0100) Please refer section 0.	Parameter 0: **PSKEY: DD** **(Decimal)** Parameter 1: **Value: HHHH** **(Hex Word)**	Successful: ACK Failed: NAK##
GT3	Read Local Device Name		Successful: Local Device Name, ACK Failed: NAK##
GT5	Read PSKEY Value Example: BGT501 (Get PSKEY 1)		Successful: KV**HHHH**, ACK Failed: NAK##
DD	Delete Paired Initiator's BD Address Reset is necessary to enable deletion.		Success: ACK Failed: NAK##
RS	Reset the module		Successful: Ver. XXXX Failed: NAK##
RL	Role switch	Parameter: **0 : Peripheral** **1 : Central**	Successful: ACK Failed: NAK##

Link Control			
CD	Connectable & Discoverable (Advertising Start or Stop)	<u>Parameter</u> Connectable / Discoverable flag **'0'** – Advertising Stop. Not Connectable or Discoverable. **'1'** – Advertising Start. Connectable and Discoverable. Allow Scan Request from Any, Allow Connect Request from White List Only. **'2'** – Directed Advertising Start. **'3'** – Both Advertising Start. Connectable and Discoverable. **'4'** – Discoverable but not connectable.	Successful: ACK, Failed: NAK##

4.1.2. Common Response Events

Response Events	Function	Parameters
ACK	Successful	
NAK##	Failed	Failed Reason – See Error section 4.3. for further details.
CON	Connection successful	Established Remote BD_ADDR
DCO	Disconnect	
ADT	Advertising Timeout	
PAS	Pairing Success	
SDC	Service Discovery Complete	
DSR	Disable Service	

4.2 Persistent Store (PS) User Key Description List

All Values for "Defaults" are in HEX notation.

Name	PSKEY_USER00	Key Length:	1
Descriptive Name:	Baud rate		
Description:	Set Session Baud Rate. (bps) 0001: 9600, 0002: 19200, 0003: 38400, 0004: 57600, 0005: 115200 0006: 230400, 0007: 460800, 0008: 921600		
Default:	0001 (9600bps)		
Range	0001 - 0008		

Name	PSKEY_USER01	Key Length:	1
Descriptive Name:	Advertising Timeout (sec)		
Description:	Advertising Timeout defines the timeout for the advertising. 0000 means timeout is disabling. Advertising will continue forever.		
Default:	003C (60sec)		
Range	0000 – 00B4 (0 – 180sec)		

Name	PSKEY_USER02	Key Length:	1
Descriptive Name:	Advertising Interval (msec)		
Description:	The time between the start of two consecutive advertising events. The value in this parameter is multiplied by 0.625msec.		
Default:	0040 (40msec)		
Range	0020 – 4000 (20 – 10240msec)		

Name	PSKEY_USER03	Key Length:	1
Descriptive Name:	Connection Interval Minimum (msec)		
Description:	Defines minimum value for the connection interval. The value in this parameter is multiplied by 1.25msec.		
Default:	0050 (100msec)		
Range	0006 – 0C80 (7.5 – 4000msec)		

Name	PSKEY_USER04	Key Length:	1
Descriptive Name:	Connection Interval Maximum (msec)		
Description:	Defines maximum value for the connection interval. The value in this parameter is multiplied by 1.25msec.		
Default:	00A0 (200msec)		
Range	0006 – 0C80 (7.5 – 4000msec)		

Name	PSKEY_USER05	Key Length:	1
Descriptive Name:	Slave latency		
Description:	Defines the slave latency for the connection in number of connection events. The Slave Latency field shall have a value in the range of 0 to ((SupervisionTimeout / connectionInterval) -1). The Slave Latency field shall be less than or equal to 500.		
Default:	0000		
Range	0000 – 01F4 (0 – 500)		

Name	PSKEY_USER06	Key Length:	1
Descriptive Name:	Supervision Timeout (msec)		
Description:	Defines the connection supervision timeout. The value in this parameter is multiplied by 10msec.		
Default:	01F4 (5000msec)		
Range	000A– 0C80 (100 – 32000msec)		

Name	PSKEY_USER07	Key Length:	1
Descriptive Name:	Auto Advertising Start setting		
Description:	This will store Auto Advertising Start setting. “0000” will enable Auto Advertising Start. Advertising will start automatically when startup or disconnected. “0001” will disable Auto Advertising Start.		
Default:	0000		
Range	0000– 0001		

Name	PSKEY_USER08	Key Length:	1
Descriptive Name:	Security setting		
Description:	This will store Security setting. “0000” will disable Security setting. “0001” will enable Security setting (LE Security Mode1, Level 2).		
Default:	0000		
Range	0000– 0001		

Name	PSKEY_USER12	Key Length:	1
Descriptive Name:	TX power setting.		
Description:	Set the radio's transmit power. Radio transmit power in dBm (accepted values are -30, -20, -16, -12, -8, -4, 0, and 4 dBm). 0000: 4, 0001: 0, 0002: -4, 0003: -8, 0004: -12, 0005: -16, 0006: -20, 0007: -30		
Default:	0000		
Range	0000– 0007		

Name	PSKEY_USER13	Key Length:	1
Descriptive Name:	DC/DC converter setting		
Description:	DC/DC converter setting. “0000” will disable internal DC/DC converter (and use internal LDO). “0001” will enable internal DC/DC converter. Note: When supply voltage goes below 2.1V, DCDC is disabled, and enabled when the supply voltage goes up again. About hardware specification, please refer to “DataReport”.		
Default:	0000		
Range	0000– 0001		

Name	PSKEY_USER14	Key Length:	1
Descriptive Name:	RSSI notification setting		
Description:	RSSI notification setting. Parameter “XYZZ” X : RSSI of Advertising Event (1 : enable 0: disable) * ignored in Peripheral Y : RSSI of Connection Event (1 : enable 0: disable) ZZ : Skip count ((0x)00 – (0x)FE) 2-digit hexadecimal number of Connection Event in which RSSI is not notified.		
Default:	0000		
Range	0000– 11FE		

Device Name: “TYSA-B 3.0.0”

4.3 Error Codes

Omitted.

4.4 Message Sequence Chart

4.4.1. Power On (In case of PSKEY_USER01≠'0000' and PSKEY_USER07='0000')

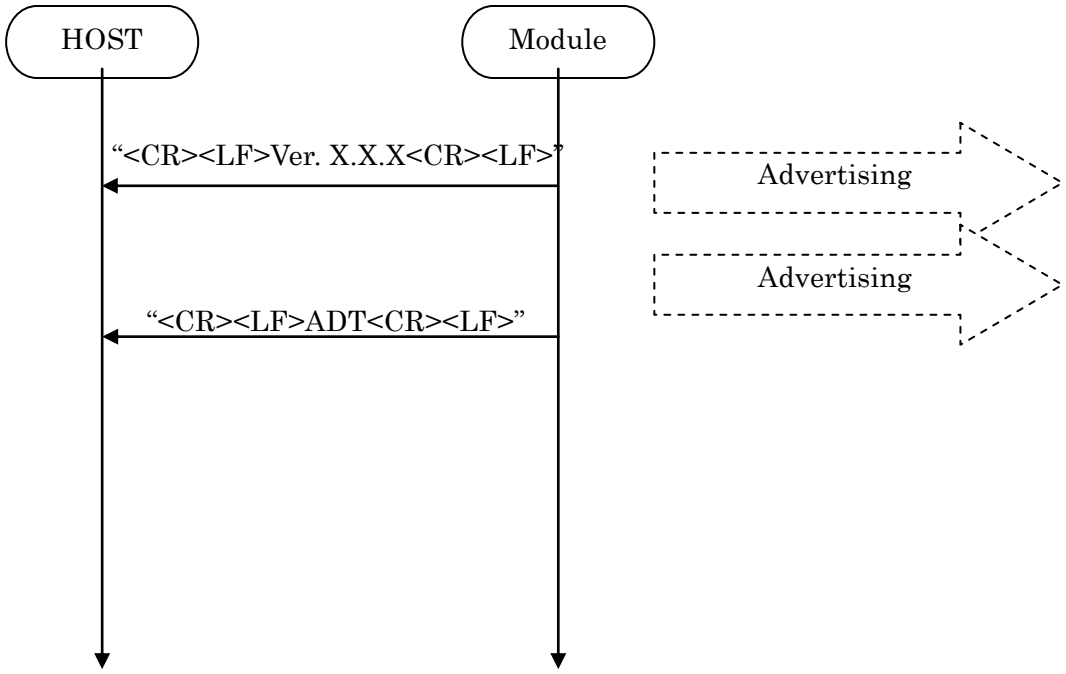

4.4.2. Advertising Start

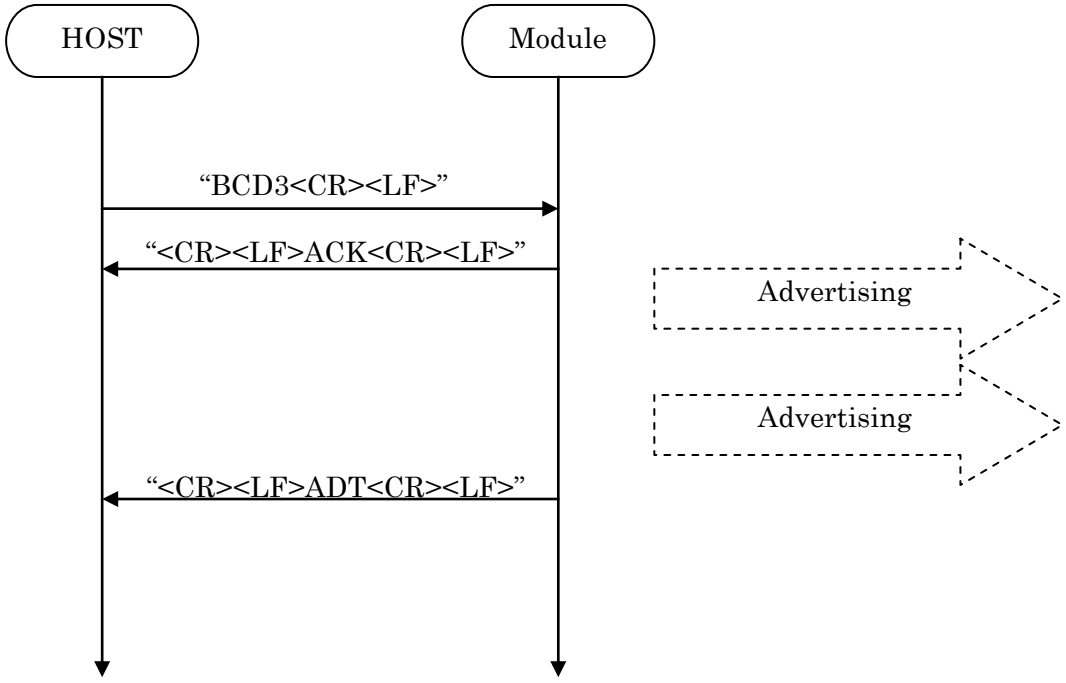

4.4.3. Advertising Stop

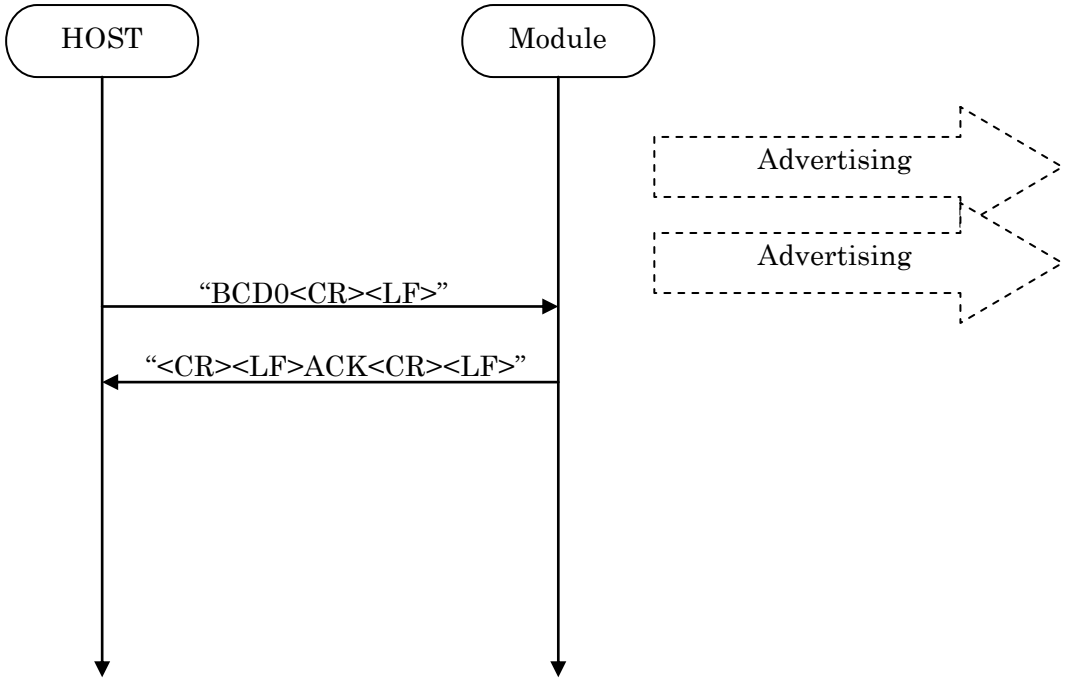

4.4.4. Connect

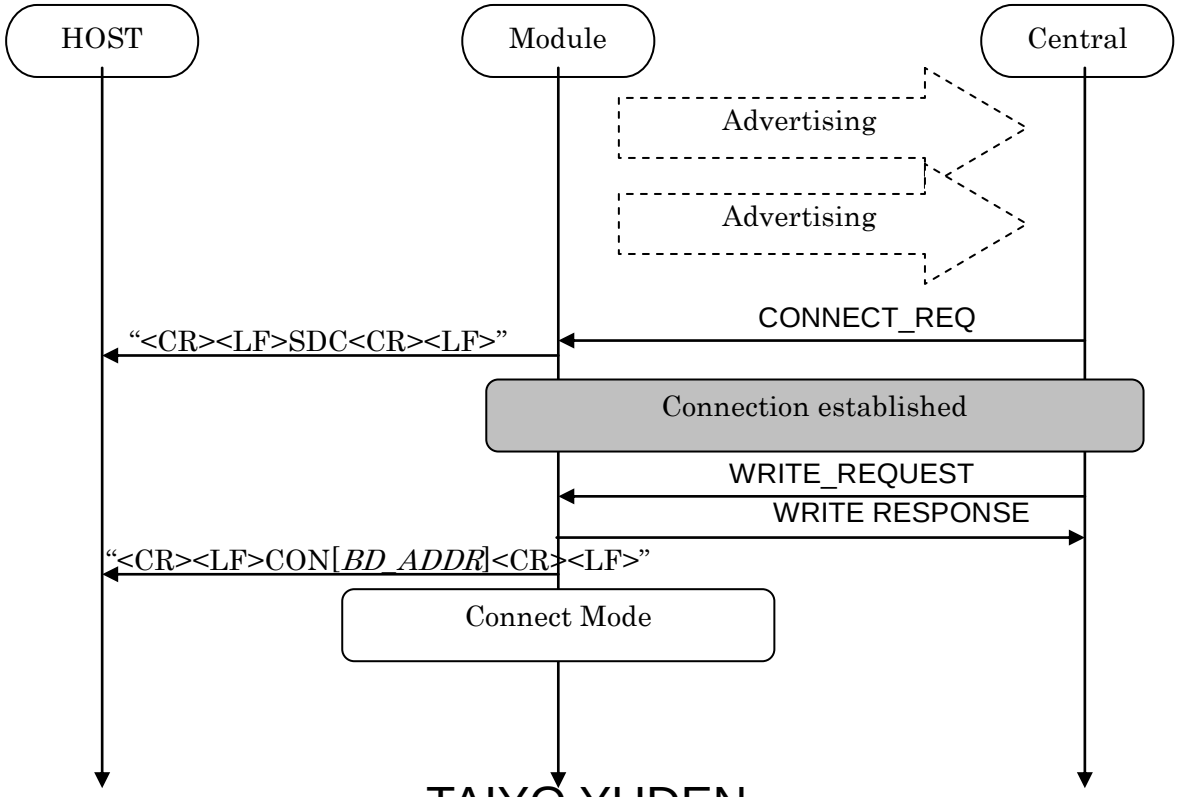

4.4.5. Sending & Receiving Data over a connected Link

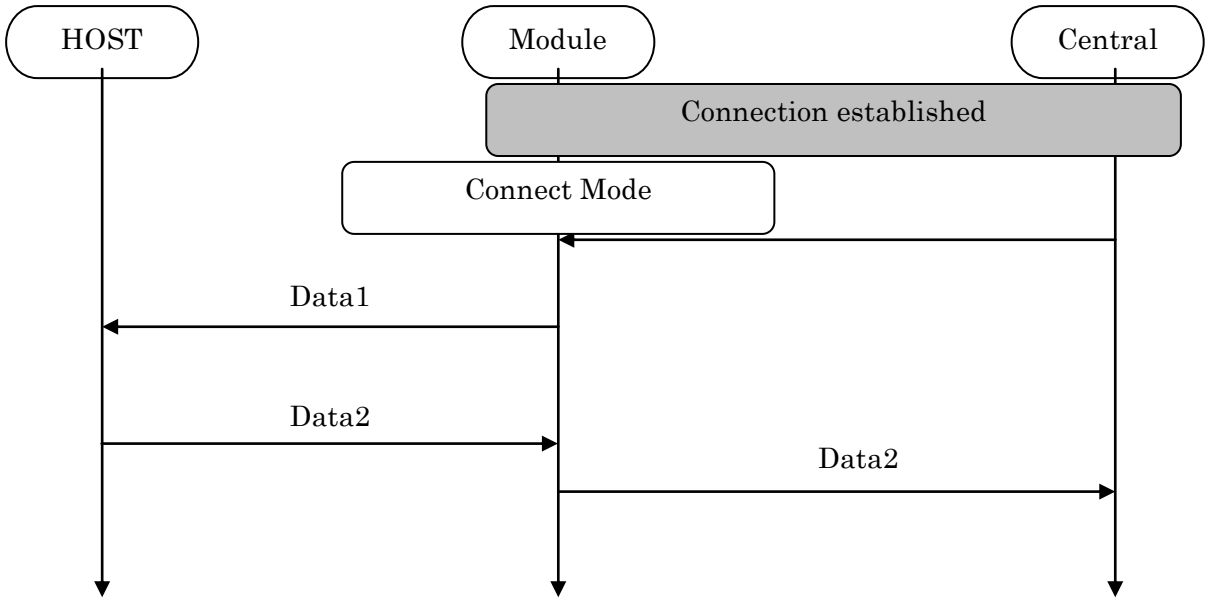

Max send a packet data size = 20bytes
Max receive a packet data size = 20bytes

4.4.6. Disconnect

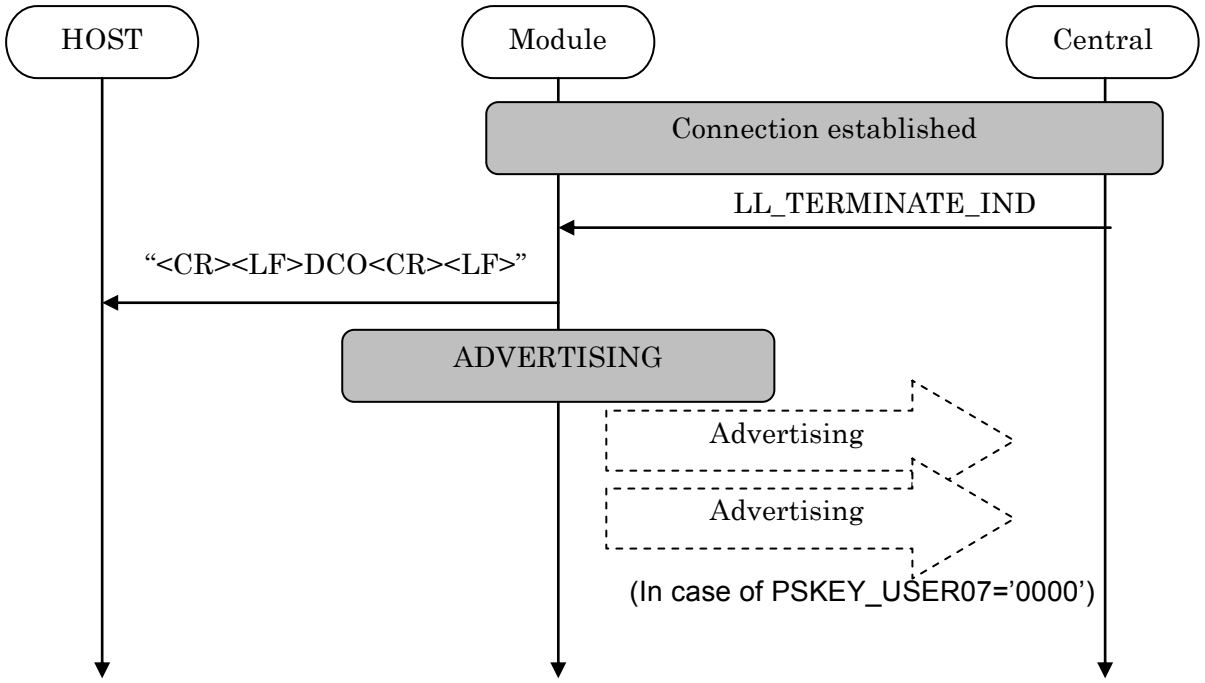

4.5 GPIO state and control

Pin Name	Input / Output	Description
P0.04	Input	Forced initialize, Request Sleep mode
P0.06	Input	Disconnect request
		Resume from Power saving mode