Notice for TAIYO YUDEN Products

[For General Electronic Equipment (General Environment)]

Please read this notice before using the TAIYO YUDEN products.

⚠ REMINDERS

- Product information in this catalog is as of October 2017. All of the contents specified herein are subject to change without notice due to technical improvements, etc. Therefore, please check for the latest information carefully before practical application or use of our products.

  Please note that TAIYO YUDEN shall not be in any way responsible for any damages and defects in products or equipment incorporating our products, which are caused under the conditions other than those specified in this catalog or individual product specification sheets.

- Please contact TAIYO YUDEN for further details of product specifications as the individual product specification sheets are available.

- Please conduct validation and verification of our products in actual condition of mounting and operating environment before using our products.

- The products listed in this catalog are intended for use in general electronic equipment (e.g., AV equipment, OA equipment, home electric appliances, office equipment, information and communication equipment including, without limitation, mobile phone, and PC) and medical equipment classified as Class I or II by IMDRF. Please be sure to contact TAIYO YUDEN for further information before using the products for any equipment which may directly cause loss of human life or bodily injury (e.g., transportation equipment including, without limitation, automotive powertrain control system, train control system, and ship control system, traffic signal equipment, disaster prevention equipment, medical equipment classified as Class III by IMDRF, highly public information network equipment including, without limitation, telephone exchange, and base station).

  Please do not incorporate our products into any equipment requiring high levels of safety and/or reliability (e.g., aerospace equipment, aviation equipment*, medical equipment classified as Class IV by IMDRF, nuclear control equipment, undersea equipment, military equipment).

  *Note: There is a possibility that our products can be used only for aviation equipment that does not directly affect the safe operation of aircraft (e.g., in-flight entertainment, cabin light, electric seat, cooking equipment) if such use meets requirements specified separately by TAIYO YUDEN. Please be sure to contact TAIYO YUDEN for further information before using our products for such aviation equipment.

  When our products are used even for high safety and/or reliability-required devices or circuits of general electronic equipment, it is strongly recommended to perform a thorough safety evaluation prior to use of our products and to install a protection circuit as necessary.

  Please note that unless you obtain prior written consent of TAIYO YUDEN, TAIYO YUDEN shall not be in any way responsible for any damages incurred by you or third parties arising from use of the products listed in this catalog for any equipment requiring inquiry to TAIYO YUDEN or prohibited for use by TAIYO YUDEN as described above.

- Information contained in this catalog is intended to convey examples of typical performances and/or applications of our products and is not intended to make any warranty with respect to the intellectual property rights or any other related rights of TAIYO YUDEN or any third parties nor grant any license under such rights.

- Please note that the scope of warranty for our products is limited to the delivered our products themselves and TAIYO YUDEN shall not be in any way responsible for any damages resulting from a fault or defect in our products. Notwithstanding the foregoing, if there is a written agreement (e.g., supply and purchase agreement, quality assurance agreement) signed by TAIYO YUDEN and your company, TAIYO YUDEN will warrant our products in accordance with such agreement.

- The contents of this catalog are applicable to our products which are purchased from our sales offices or authorized distributors (hereinafter "TAIYO YUDEN's official sales channel"). Please note that the contents of this catalog are not applicable to our products purchased from any seller other than TAIYO YUDEN's official sales channel.

- Caution for Export
  Some of our products listed in this catalog may require specific procedures for export according to "U.S. Export Administration Regulations", "Foreign Exchange and Foreign Trade Control Law" of Japan, and other applicable regulations. Should you have any questions on this matter, please contact our sales staff.

AXIAL LEADED INDUCTORS

WAVE

■PARTS NUMBER

*Operating Temp. : −25～+105℃(Including self-generated heat)

C	A	L	△	4	5	T	B	△	1	R	5	K	△	△	△	△
①		②		③		④			⑤			⑥	⑦			

△=Blank space

①Series name

Code	Series name
CA	High current axial leaded inductor

②Characteristics

Code	Characteristics
L△	Standard

③Dimensions(L×D)

Code	Dimensions(L×D)[mm]
45	8.0×4.4

④Lead configurations

Code	Lead configurations
TB	Axial lead (52mm lead space)/ammo pack
VB	Formed lead/ammo pack

⑤Nominal inductance

Code (example)	Nominal inductance[μH]
1R5	1.5
120	12

※R=Decimal point

⑥Inductance tolerance

Code	Inductance tolerance
K	±10%

⑦Internal code

Code	Internal code
△△△△	Standard

■STANDARD EXTERNAL DIMENSIONS / STANDARD QUANTITY

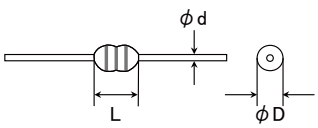

Taping	
Straight(TB)	Formed(VB)
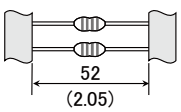	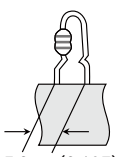

Type	L	ϕD	ϕd	Standard quantity [pcs] Taping	
				Axial lead	Formed lead
CAL 45	8.0 max (0.315 max)	4.4 max (0.173 max)	0.65±0.05 (0.026±0.002)	2000	1500

Unit:mm(inch)

▶ This catalog contains the typical specification only due to the limitation of space. When you consider the purchase of our products, please check our product specification sheets. For details of each product (characteristics graph, reliability information, precautions for use, and so on), see our website (http://www.ty-top.com/) .

●CAL45

Parts number	EHS	Nominal inductance [μH]	Inductance tolerance	Measuring frequency [MHz]	DC ResistanceDC [Ω] (max.)	Rated current ※) [mA] (max.)	
						Saturation current Idc1	Temperature rise current Idc2
CAL 45□ 1R0K	RoHS	1.0	±10%	7.96	0.036	5600	3300
CAL 45□ 1R2K	RoHS	1.2	±10%	7.96	0.039	5000	3200
CAL 45□ 1R5K	RoHS	1.5	±10%	7.96	0.041	4400	3000
CAL 45□ 1R8K	RoHS	1.8	±10%	7.96	0.048	4100	2800
CAL 45□ 2R2K	RoHS	2.2	±10%	7.96	0.054	3900	2700
CAL 45□ 2R7K	RoHS	2.7	±10%	7.96	0.058	3500	2500
CAL 45□ 3R3K	RoHS	3.3	±10%	7.96	0.066	3100	2400
CAL 45□ 3R9K	RoHS	3.9	±10%	7.96	0.072	3000	2300
CAL 45□ 4R7K	RoHS	4.7	±10%	7.96	0.079	2800	2200
CAL 45□ 5R6K	RoHS	5.6	±10%	7.96	0.089	2500	2100
CAL 45□ 6R8K	RoHS	6.8	±10%	7.96	0.097	2200	2000
CAL 45□ 8R2K	RoHS	8.2	±10%	7.96	0.110	2000	1900
CAL 45□ 100K	RoHS	10	±10%	2.52	0.14	1700	1800
CAL 45□ 120K	RoHS	12	±10%	2.52	0.17	1600	1450
CAL 45□ 150K	RoHS	15	±10%	2.52	0.19	1400	1430
CAL 45□ 180K	RoHS	18	±10%	2.52	0.24	1250	1300
CAL 45□ 220K	RoHS	22	±10%	2.52	0.28	1200	1220
CAL 45□ 270K	RoHS	27	±10%	2.52	0.33	1100	1130
CAL 45□ 330K	RoHS	33	±10%	2.52	0.37	1000	1080
CAL 45□ 390K	RoHS	39	±10%	2.52	0.47	920	900
CAL 45□ 470K	RoHS	47	±10%	2.52	0.52	890	870
CAL 45□ 560K	RoHS	56	±10%	2.52	0.75	790	710
CAL 45□ 680K	RoHS	68	±10%	2.52	0.78	700	700
CAL 45□ 820K	RoHS	82	±10%	2.52	0.92	620	640
CAL 45□ 101K	RoHS	100	±10%	0.796	1.2	590	630
CAL 45□ 121K	RoHS	120	±10%	0.796	1.6	550	490
CAL 45□ 151K	RoHS	150	±10%	0.796	1.8	490	470
CAL 45□ 181K	RoHS	180	±10%	0.796	2.3	420	450
CAL 45□ 221K	RoHS	220	±10%	0.796	2.9	370	425
CAL 45□ 271K	RoHS	270	±10%	0.796	3.4	350	355
CAL 45□ 331K	RoHS	330	±10%	0.796	3.6	320	330
CAL 45□ 391K	RoHS	390	±10%	0.796	4.9	290	280
CAL 45□ 471K	RoHS	470	±10%	0.796	6.3	270	240
CAL 45□ 561K	RoHS	560	±10%	0.796	7.0	250	240
CAL 45□ 681K	RoHS	680	±10%	0.796	7.8	240	220
CAL 45□ 821K	RoHS	820	±10%	0.796	11.0	220	210
CAL 45□ 102K	RoHS	1000	±10%	0.252	13.2	190	170
CAL 45□ 122K	RoHS	1200	±10%	0.252	17	170	150
CAL 45□ 152K	RoHS	1500	±10%	0.252	22	150	140
CAL 45□ 182K	RoHS	1800	±10%	0.252	27	140	120
CAL 45□ 222K	RoHS	2200	±10%	0.252	36	130	110
CAL 45□ 272K	RoHS	2700	±10%	0.252	45	110	90
CAL 45□ 332K	RoHS	3300	±10%	0.252	65	100	75
CAL 45□ 392K	RoHS	3900	±10%	0.252	69	95	70
CAL 45□ 472K	RoHS	4700	±10%	0.252	80	90	65
CAL 45□ 562K	RoHS	5600	±10%	0.252	90	90	60
CAL 45□ 682K	RoHS	6800	±10%	0.252	100	80	60
CAL 45□ 822K	RoHS	8200	±10%	0.252	125	75	50
CAL 45□ 103K	RoHS	10000	±10%	0.0796	155	65	45

・□ Please specify the Lead configuration code.

※) The saturation current value (Idc1) is the DC current value having inductance decrease down to 10%. (at 20℃)
※) The temperature rise current value (Idc2) is the DC current value having temperature increase up to 40℃. (at 20℃)
※) The rated current is the DC current value that satisfies both of current value saturation current value and temperature rise current value.

▶ This catalog contains the typical specification only due to the limitation of space. When you consider the purchase of our products, please check our product specification sheets. For details of each product (characteristics graph, reliability information, precautions for use, and so on), see our website (http://www.ty-top.com/) .

AXIAL LEADED INDUCTORS

■PACKAGING

①Minimum Quantity

●Taping for Straight Leads

Type	Lead Configuration code	Standard quantity [pcs]
CAL45	TB	2,000

●Taping for Formed Leads

Type	Lead Configuration code	Standard quantity [pcs]
CAL45	VB	1,500

②Dimension

●CAL 45 TB(a:52mm lead space)
(2.05 inches)

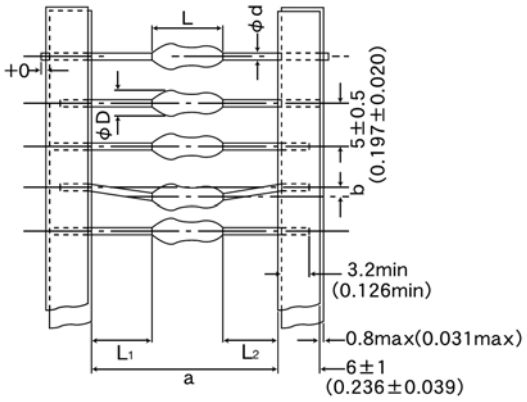

Type	Dimensions						Minimum insertion pitch
	ϕD	L	a	b	$\|L_1-L_2\|$	ϕd	
CAL45	4.4max (0.173max)	8.0max (0.315max)	52+2/−1 (2.05+0.079/−0.039)	1.2max (0.047max)	1.0max (0.039max)	0.65±0.05 (0.026±0.002)	10.0 (0.394)

Unit:mm(inch)

●CAL 45VB

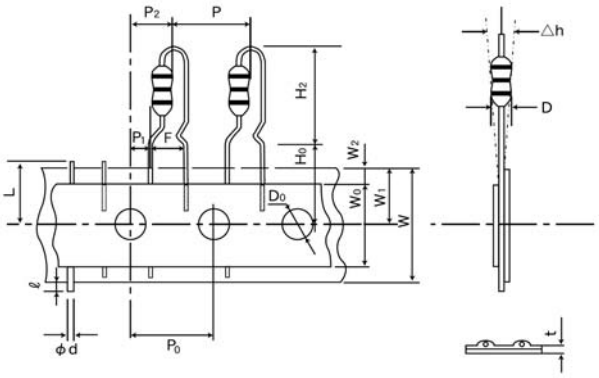

Type	Symbol	Dimensions	Symbol	Dimensions	Symbol	Dimensions
CAL 45	D	ϕ4.4max	P_2	6.35±1.3 (0.250±0.051)	W_2	3.0max ※2 (0.118max)
	H_2	14.0max (0.551max)	F	5.0±1.0 (0.197±0.039)	ℓ	2.0max (0.079max)
	H_0	16.0±1.0 (0.630±0.039)	△h	0.0±2.0 (0.0±0.079)	D_0	ϕ4.0±0.2 (ϕ0.157±0.008)
	P	12.7±1.0 (0.500±0.039)	W	18.0+1.0/−0.5 (0.709+0.039/−0.020)	ϕd	ϕ0.65±0.05 (ϕ0.026±0.002)
	P_0	12.7±0.3 ※1 (0.500±0.012)	W_0	12.5min (0.492min)	L	11.0max (0.433max)
	P_1	3.85±0.7 (0.152±0.028)	W_1	9.0+0.75/−0.5 (0.354+0.030/−0.020)	t	0.9max (0.035max)

Unit:mm(inch)

※1 Accumulated error for 20 pitches is ± 1mm.
※2 Bonding tape must not protrude from the base tape.

▸ This catalog contains the typical specification only due to the limitation of space. When you consider the purchase of our products, please check our specification.
For details of each product (characteristics graph, reliability information, precautions for use, and so on), see our Web site (http://www.ty-top.com/) .

AXIAL LEADED INDUCTORS(CAL Type)、
RADIAL LEADED INDUCTORS(LH Type)、
LEADED FERRITE BEAD INDUCTORS(FB Series A Type／R Type)

■RELIABILITY DATA

1. Operating temperature Range		
Specified Value	CAL45 Type LHL□□□ FBA/FBR	−25～＋ 105℃
Test Methods and Remarks	CAL45 Type LHL□□□ FBA/FBR	Including self-generated heat

2. Storage temperature Range		
Specified Value	CAL45 Type LHL□□□ FBA/FBR	−40～＋ 85℃(Except for taping condition)

3. Rated current		
Specified Value	CAL45 Type LHL□□□ FBA/FBR	Within the specified tolerance
Test Methods and Remarks	CAL45 Type : The maximum DC value having inductance within 10% and temperature increase within 40℃ by the application of DC bias. LHL□□□ : The maximum DC value having inductance decrease within 10% (LHLC08, LHLC10:within 30%) and temperature increase within the following specified temperature by the application of DC bias. Reference temperature : 25℃(LHL08, LHL10) : 40℃(LHLC08, LHLC10) FBA/FBR : No disconnection or appearance abnormality by continuous current application for 30 min. Change after the application shall be within ±20% of the initial value. This is not guaranteed for electrical characteristics during current application.	

4. Impedance		
Specified Value	CAL45 Type	
	LHL□□□	
	FBA/FBR	Within the specified tolerance
Test Methods and Remarks	FBA/FBR : Measuring equipment : Impedance analyzer (HP4191A) or its equivalent Measuring frequency : Specified frequency	

5. Inductance		
Specified Value	CAL45 Type LHL□□□	Within the specified tolerance
	FBA/FBR	
Test Methods and Remarks	CAL45 Type : Measuring equipment : LCR meter (HP4285A + HP42851A or its equivalent) Measuring frequency : Specified frequency LHL□□□ : Measuring equipment : LCR meter (HP4285A＋HP42851A or its equivalent) : LCR meter (HP4263A) or its equivalent (at 1kHz) Measuring frequency : Specified frequency	

6. Q

Specified Value	CAL45 Type	
	LHL□□□	Within the specified tolerance
	FBA/FBR	
Test Methods and Remarks	LHL□□□ Measuring equipment : LCR meter (HP4285A＋HP42851A or its equivalent) : LCR meter (HP4263A) or its equivalent (at 1kHz) Measuring frequency : Specified frequency	

7. DC Resistance

Specified Value	CAL45 Type	Within the specified tolerance
	LHL□□□	
	FBA/FBR	
Test Methods and Remarks	Measuring equipment : DC ohmmeter	

8. Self resonance frequency

Specified Value	CAL45 Type	
	LHL□□□	Within the specified tolerance
	FBA/FBR	
Test Methods and Remarks	LHL□□□ Measuring equipment : (HP4191A, 4192A) its equivalent	

9. Temperature characteristic

Specified Value	CAL45 Type	
	LHL□□□	△L/L : Within ±7%
	FBA/FBR	

Test Methods and Remarks

Change of maximum inductance deviation in step 1 to 5

Step	Temperature (℃)
	LHL□□□
1	20
2	Minimum operating temperature
3	20 (Standard temperature)
4	Maximum operating temperature
5	20

10. Tensile strength test

Specified Value	CAL45 Type	No abnormality such as cut lead, or looseness.
	LHL□□□	
	FBA/FBR	

Test Methods and Remarks

CAL45 Type : Apply the stated tensile force progressively in the direction to draw terminal.

force (N)	duration (s)
10	10

LHL□□□ : Apply the stated tensile force progressively in the direction to draw terminal.

Nominal wire diameter tensile ϕd (mm)	force (N)	duration (s)
0.3＜ϕd≦0.5	5	30±5
0.5＜ϕd≦0.8	10	
0.8＜ϕd≦1.2	25	

FBA/FBR : The body of a component shall be fixed and a tensile force of 20±1N shall be applied to the lead wire in the axial direction of the component during 10±1 seconds.

11. Over current		
Specified Value	CAL45 Type	No emission of smoke no firing.
	LHL□□□	There shall be no scorch or short of wire. LHLC08, LHLC10 : There shall be no firing.
	FBA/FBR	
Test Methods and Remarks	LHL□□□・CAL45 Type : Measuring current : Rated current×2 Duration : 5 min. Number of measuring : one time	

12. Terminal strength : bending		
Specified Value	CAL45 Type	No abnormality such as cut lead, or looseness.
	LHL□□□	
	FBA/FBR	

Test Methods and Remarks

CAL45 Type :

Suspend a weight of specified mass at the end of the terminals and incline the body through the angle of 90 degrees and return it to the initial position. This operation is done over a period of 2-3 sec. Then second bend in the opposite direction shall be made.

Number of bends : Two times.

Nominal wire diameter tensile	Bending force	Mass reference weight
0.3< φ d≦0.5	2.5	0.25
0.5< φ d≦0.8	5	0.50

LHL□□□・FBA/FBR :

Suspend a weight of specified mass at the end of the terminals and incline the body through the angle of 90 degrees and return it to the initial position. This operation is done over a period of 2-3 sec. Then second bend in the opposite direction shall be made.

Number of bends : Two times.

Nominal wire diameter tensile	Bending force	Mass reference weight
0.3< φd≦0.5	2.5	0.25
0.5< φd≦0.8	5	0.5
0.8< φd≦1.2	10	1.0

13. Insulation resistance : between the terminals and body		
Specified Value	CAL45 Type	
	LHL□□□	100MΩmin.
	FBA/FBR	
Test Methods and Remarks	LHL□□□ : Applied voltage : 500 VDC Duration : 60 sec.	

14. Insulation resistance : between terminals and core		
Specified Value	CAL45 Type	
	LHL□□□	
	FBA/FBR	1MΩmin.
Test Methods and Remarks	FBA/FBR : Applied voltage : 100 VDC Duration : 60±5 sec.	

15. Withstanding : between the terminals and body		
Specified Value	CAL45 Type	
	LHL□□□	No abnormality such as insulation damage
	FBA/FBR	
Test Methods and Remarks	LHL□□□ : According to JIS C5101-1. Metal global method Applied voltage : 500 VDC Duration : 60 sec.	

16. DC bias characteristic		
Specified Value	CAL45 Type	ΔL/L : Within －10%
	LHL□□□	
	FBA/FBR	
Test Methods and Remarks	CAL45 Type : Measure inductance with application of rated current using LCR meter to compare it with the initial value.	

17. Body strength		
Specified Value	CAL45 Type	No abnormality as damage.
	LHL□□□	
	FBA/FBR	No abnormality such as cracks on body.
Test Methods and Remarks	CAL45 Type : Applied force :50N Duration : 10 sec. Speed : Shall attain to specified force in 2 sec. FBA : Applied force : 50±3N Duration : 30±1 sec. 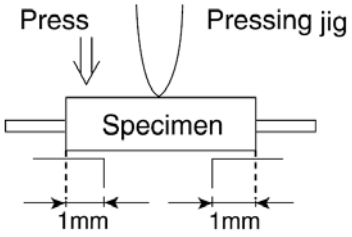 	

18. Resistance to vibration		
Specified Value	CAL45 Type	ΔL/L : Within ±5%
	LHL□□□	Appearance : No abnormality ΔL/L : Within ±5% Q change : Within ±30%
	FBA/FBR	Appearance : No abnormality Impedance change : Within ±20%
Test Methods and Remarks	CAL45 Type : Directions : 2 hrs each in X, Y and Z directions total : 6hrs. Frequency range : 10 to 55 to 10Hz (1min.) Amplitude : 1.5mm Mounting method : Soldering onto printed board. Recovery : At least 1hr of recovery under the standard condition after the test, followed by the measurement within 2hrs. LHL□□□・FBA/FBR : Directions : 2 hrs each in X, Y and Z directions total : 6hrs. Frequency range : 10 to 55 to 10Hz (1min.) Amplitude : 1.5mm Mounting method : Soldering onto printed board.	

19. Resistance to shock		
Specified Value	CAL45 Type	No significant abnormality in appearance
	LHL□□□	
	FBA/FBR	
Test Methods and Remarks	CAL45 Type : Drop test Impact material : concrete or vinyl tile Height : 1m Total number of drops : 10 times	

20. Solderability

Specified Value	CAL45 Type	At least 75% of terminal electrode is covered by new solder.
	LHL□□□	At least 75% of terminal electrode is covered by new solder.
	FBA/FBR	At least 90% of terminal electrode is covered by new solder.
Test Methods and Remarks	CAL45 Type : Solder temperature : 230±5℃ Duration : 2±0.5 sec. LHL□□□ : Solder temperature : 235±5℃ Duration : 2±0.5 sec. Immersion depth : Up to 1.5mm from bottom of case. FBA/FBR : Solder temperature : 230±5℃ Duration : 3±1 sec. Immersion depth : Up to 1.5mm from terminal root.	

21. Resistance to soldering heat

Specified Value	CAL45 Type	△L/L : Within ±5%
	LHL□□□	No significant abnormality in appearance Inductance change : Within ±5% Q change : Within ±30%
	FBA/FBR	No significant abnormality in appearance Impedance change : Within ±20%
Test Methods and Remarks	CAL45 Type : Solder temperature : 270±5℃ Duration : 5±0.5 sec. One time Immersed conditions : Inserted into substrate with t=1.6mm Recovery : At least 1hr of recovery under the standard condition after the test, followed by the measurement within 2hrs. LHL□□□ : Solder bath method : Solder temperature : 260±5℃ Duration : 10±1 sec. : Up to 1.5mm from the bottom of case. Manual soldering : Solder temperature : 350±10℃ (At the tip of soldering iron) Duration : 5±1 sec. : Up to 1.5mm from the bottom of case. Caution : No excessive pressing shall be applied to terminals. Recovery : 1 to 2hrs of recovery under the standard condition after the test. FBA/FBR : Solder bath method: Condition 1: Solder temperature : 260±5℃ Duration : 10±1 sec. Immersion depth : Up to 1.5mm from the terminal root. Condition 2 : Solder temperature : 350±5℃ Duration : 3±1 sec. Immersion depth : Up to 1.5mm from the terminal root. Recovery : 3hrs of recovery under the standard condition after the test.	

22. Resistance to solvent

Specified Value	CAL45 Type	Please avoid the ultrasonic cleaning of this product.
	LHL□□□	
	FBA/FBR	No significant abnormality in appearance Impedance change : Within ±20%
Test Methods and Remarks	FBA/FBR : Solvent temperature : 20～25℃ Duration : 30±5 sec. Solvent type : Acetone Recovery : 3hrs of recovery under the standard condition after the test.	

23. Thermal shock

Specified Value	CAL45 Type	△L/L : Within ±10%
	LHL□□□	Appearance : No abnormality Inductance change : Within ±10% Q change : Within ±30%
	FBA/FBR	Appearance : No abnormality Impedance change : Within ±20%

Test Methods and Remarks

CAL45 Type : Conditions for 1cycle

Step	Temperature (℃)	Duration (min.)
1	−25+0/−3	30±3
2	Room temperature	Within 3
3	+85+2/−0	30±3
4	Room temperature	Within 3

Number of cycles : 5 cycles
Recovery : At least 1hr of recovery under the standard condition after the removal from test chamber, followed by the measurement within 2hrs.

LHL□□□・FBA/FBR: According to JIS C60068-2-14.
Conditions for 1 cycle

Step	Temperature (℃)	Duration (min.)
1	Minimum operating temperature	30±3
2	Room temperature	Within 3
3	Maximum operating temperature	30±3
4	Room temperature	Within 3

Number of cycles : 10 cycles〔LHL□□□〕
Recovery : 5 cycles (FBA/ FBR)
: 1 to 2hrs of recovery under the standard condition after the removal from the test chamber.〔LHL□□□〕
: 3hrs of recovery under the standard condition after the removal from the test chamber. (FBA/ FBR)

24. Damp heat

Specified Value	CAL45 Type	△L/L : Within ±10%
	LHL□□□	
	FBA/FBR	Appearance : No abnormality Impedance change : Within ±20%

Test Methods and Remarks

CAL45 Type :
Temperature : 40±2℃
Humidity : 90～95%RH
Duration : 1000 hrs
Recovery : At least 1hr of recovery under the standard removal from test chamber, followed by the measurement within 2hrs.

FBA/FBR :
Temperature : 60±2℃
Humidity : 90～95%RH
Duration : 1000 hrs
Recovery : 3hrs of recovery under the standard condition after the removal from the test chamber.

25. Loading under damp heat		
Specified Value	CAL45 Type	△L/L : Within ±10%
	LHL□□□	Appearance : No abnormality Inductance change : Within ±10% Q change : Within ±30%
	FBA/FBR	
Test Methods and Remarks	CAL45 Type : Temperature : 40±2℃ Humidity : 90～95%RH Duration : 1000 hrs Applied current : Rated current Recovery : At least 1hr of recovery under the standard removal from test chamber, followed by the measurement within 2hrs. LHL□□□ : Temperature : 40±2℃ Humidity : 90～95%RH Duration : 1000+48/−0 hrs Applied current : Rated current Recovery : 1 to 2hrs of recovery under the standard condition after the removal from the test chamber.	

26. Loading at high temperature		
Specified Value	CAL45 Type	△L/L : Within ±10%
	LHL□□□	
	FBA/FBR	
Test Methods and Remarks	CAL45 Type : Temperature : 85±2℃ Duration : 1000 hrs Applied current : Rated current Recovery : At least 1hr of recovery under the standard removal from test chamber, followed by the measurement within 2hrs.	

27. Low temperature life test		
Specified Value	CAL45 Type	△L/L : Within ±10%
	LHL□□□	Appearance : No abnormality Inductance change : Within ±10% Q change : Within ±30%
	FBA/FBR	
Test Methods and Remarks	CAL45 Type : Temperature : −25±2℃ Duration : 1000 hrs Recovery : At least 1hr of recovery under the standard removal from test chamber, followed by the measurement within 2hrs. LHL□□□ : Temperature :−40±3℃ Duration : 1000+48/−0 hrs Recovery : 1 to 2hrs of recovery under the standard condition after the removal from the test chamber.	

28. High temperature life test		
Specified Value	CAL45 Type	
	LHL□□□	Appearance : No abnormality Inductance change : Within ±10% Q change : Within ±30%
	FBA/FBR	
Test Methods and Remarks	LHL□□□ : Temperature : 105±2℃ Duration : 1000+48/−0 hrs Recovery : 1 to 2hrs of recovery under the standard condition after the removal from the test chamber.	

AXIAL LEADED INDUCTORS(CAL Type)、
RADIAL LEADED INDUCTORS(LH Type)、
LEADED FERRITE BEAD INDUCTORS(FB Series A Type／R Type)

■PRECAUTIONS

1. Circuit Design	
Precautions	◆Operating environment 1. The products described in this specification are intended for use in general electronic equipment,(office supply equipment, telecommunications systems, measuring equipment, and household equipment). They are not intended for use in mission-critical equipment or systems requiring special quality and high reliability (traffic systems, safety equipment, aerospace systems, nuclear control systems and medical equipment including life-support systems,) where product failure might result in loss of life, injury or damage. For such uses, contact TAIYO YUDEN Sales Department in advance.

2. PCB Design	
Precautions	◆Design 1. Please design insertion pitches as matching to that of leads of the component on PCBs.
Technical considerations	◆Design 1. When Inductors are mounted onto a PC board, hole dimensions on the board should match the lead pitch of the component, if not, it will cause breakage of the terminals or cracking of terminal roots covered with resin as excess stress travels through the terminal legs.

3. Considerations for automatic placement	
Precautions	◆Adjustment of mounting machine 1. Excessive impact load should not be imposed on the products when mounting onto the PC boards. 2. Mounting and soldering conditions should be checked beforehand.
Technical considerations	◆Adjustment of mounting machine 1. When installing products, care should be taken not to apply distortion stress as it may deform the products.

4. Soldering	
Precautions	◆Wave soldering 1. Please refer to the specifications in the catalog for a wave soldering. 2. Do not immerse the entire inductor in the flux during the soldering operation. ◆Lead free soldering 1. When using products with lead free soldering, we request to use them after confirming adhesion, temperature of resistance to soldering heat, soldering etc sufficiently. ◆Recommended conditions for using a soldering iron: ・Put the soldering iron on the land-pattern. ・Soldering iron's temperature – Below 350℃ ・Duration – 3 seconds or less ・The soldering iron should not directly touch the inductor. ◆Reflow soldering 1. As for reflow soldering, please contact our sales staff.
Technical considerations	◆Lead free soldering 1. If products are used beyond the range of the recommended conditions, heat stresses may deform the products, and consequently degrade the reliability of the products. ◆Recommended conditions for using a soldering iron If products are used beyond the range of the recommended conditions, heat stresses may deform the products, and consequently degrade the reliability of the products.

5. Cleaning	
Precautions	◆Cleaning conditions 1. CAL type, LH type Please do not do cleaning by a supersonic wave.
Technical considerations	◆Cleaning conditions 1. CAL type, LH type, If washing by supersonic waves, supersonic waves may deform products.

6. Handling	
Precautions	◆Handling 1. Keep the inductors away from all magnets and magnetic objects. ◆Mechanical considerations 1. Please do not give the inductors any excessive mechanical shocks. 2. LH type If inductors are dropped onto the floor or a hard surface they should not be used. ◆Packing 1. Please do not give the inductors any excessive mechanical shocks. In loading, please pay attention to handling indication mentioned in a packing box (a loading direction / number of maximum loading / fragile item).
Technical considerations	◆Handling 1. There is a case that a characteristic varies with magnetic influence. ◆Mechanical considerations 1. There is a case to be damaged by a mechanical shock. 2. LH type There is a case to be broken by a fall. ◆Packing 1. There is a case that a lead wire could be deformed by a fall or an excessive shock.

7. Storage conditions	
Precautions	◆Storage 1. To maintain the solderability of terminal electrodes and to keep the packing material in good condition, temperature and humidity in the storage area should be controlled. Recommended conditions ・Ambient temperature 0～40℃ ・Humidity Below 70% RH The ambient temperature must be kept below 30℃. Even under ideal storage conditions, solderability of products electrodes may decrease as time passes. For this reason, inductors should be used within one year from the time of delivery. In case of storage over 6 months, solderability shall be checked before actual usage.
Technical considerations	◆Storage 1. Under a high temperature and humidity environment, problems such as reduced solderability caused by oxidation of terminal electrodes and deterioration of taping/packaging materials may take place.

RADIAL LEADED INDUCTORS

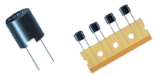

WAVE

■PARTS NUMBER

*Operating Temp. : −25〜+105℃(Including self-generated heat)

L H △	L △	0 8	T B	1 0 1	K	△ △ △
①	②	③	④	⑤	⑥	⑦

△=Blank space

①Series name

Code	Series name
LH△	Radial leaded inductor

②Characteristics

Code	Characteristics
L△	Standard type Taping available
LC	High current type

③Dimensions(D)

Code	Dimensions(D) [mm max.]
08	9.0
10	11.0

④Packaging

Code	Packaging
NB	Bulk(LHL)
TB	Ammo packaging(LHL)

⑤Nominal inductance

Code (example)	Nominal inductance [μH]
1R0	1.0
150	15
102	1000

※R=Decimal point

⑥Inductance tolerance

Code	Inductance tolerance
J	±5%
K	±10%
M	±20%
N	±30%

⑦Internal code

Code	Internal code
△△△	Standard

■STANDARD EXTERNAL DIMENSIONS / STANDARD QUANTITY

LHL /LHLC

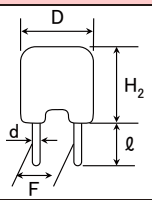

Type	D	H_2	ℓ	F	φd	Standard quantity [pcs]		
						Box	Bulk	Taping
LH L 08 LH LC08	9.0 max (0.354 max)	9.5 max (0.374 max)	5.0±1.0 (0.197±0.039)	5.0±1.0 (0.197±0.039)	0.6±0.05 (0.024±0.002)	—	100	1000
LH L 10 LH LC10	11.0 max (0.433 max)	14.0 max (0.551 max)	5.0±1.0 (0.197±0.039)	5.0±1.0 (0.197±0.039)	0.6±0.05 (0.024±0.002)	—	50	500

Unit:mm(inch)

▶ This catalog contains the typical specification only due to the limitation of space. When you consider the purchase of our products, please check our product specification sheets. For details of each product (characteristics graph, reliability information, precautions for use, and so on), see our website (http://www.ty-top.com/) .

●LHL08

Parts number	EHS	Nominal inductance [μH]	Inductance tolerance	Q (min.)	Self-resonant frequency [MHz] (min..)	DC Resistance [Ω] (max.)	Rated current [A] (max.)	Measuring frequency [MHz]
LH L 08□1R0N	RoHS	1.0	±30%	40	76	0.013	4.7	7.96
LH L 08□1R5M	RoHS	1.5	±20%	40	65	0.014	4.4	7.96
LH L 08□2R2M	RoHS	2.2	±20%	40	56	0.017	4.1	7.96
LH L 08□2R7M	RoHS	2.7	±20%	40	48	0.019	3.5	7.96
LH L 08□3R3M	RoHS	3.3	±20%	40	41	0.021	3.2	7.96
LH L 08□3R9M	RoHS	3.9	±20%	40	33	0.024	3.1	7.96
LH L 08□4R7M	RoHS	4.7	±20%	40	30	0.025	3.0	7.96
LH L 08□5R6M	RoHS	5.6	±20%	40	23	0.028	2.9	7.96
LH L 08□6R8M	RoHS	6.8	±20%	40	21	0.030	2.8	7.96
LH L 08□8R2M	RoHS	8.2	±20%	40	19	0.034	2.5	7.96
LH L 08□100K	RoHS	10	±10%	65	17	0.041	2.4	2.52
LH L 08□120K	RoHS	12	±10%	65	16	0.044	2.3	2.52
LH L 08□150K	RoHS	15	±10%	50	13	0.053	2.0	2.52
LH L 08□180K	RoHS	18	±10%	50	12	0.060	1.9	2.52
LH L 08□220K	RoHS	22	±10%	50	11	0.068	1.8	2.52
LH L 08□270K	RoHS	27	±10%	50	10	0.091	1.5	2.52
LH L 08□330K	RoHS	33	±10%	40	8.8	0.10	1.4	2.52
LH L 08□390K	RoHS	39	±10%	40	8.4	0.12	1.3	2.52
LH L 08□470K	RoHS	47	±10%	40	8.2	0.15	1.2	2.52
LH L 08□560K	RoHS	56	±10%	40	7.9	0.17	1.1	2.52
LH L 08□680K	RoHS	68	±10%	35	7.0	0.20	1.0	2.52
LH L 08□820K	RoHS	82	±10%	35	6.5	0.22	0.90	2.52
LH L 08□101K	RoHS	100	±10%	25	5.7	0.32	0.79	0.796
LH L 08□121K	RoHS	120	±10%	25	5.2	0.36	0.70	0.796
LH L 08□151K	RoHS	150	±10%	20	4.7	0.41	0.64	0.796
LH L 08□181K	RoHS	180	±10%	35	4.2	0.66	0.60	0.796
LH L 08□221K	RoHS	220	±10%	35	3.7	0.73	0.53	0.796
LH L 08□271K	RoHS	270	±10%	25	3.5	0.85	0.51	0.796
LH L 08□331K	RoHS	330	±10%	25	3.2	0.97	0.44	0.796
LH L 08□391K	RoHS	390	±10%	20	2.9	1.1	0.41	0.796
LH L 08□471K	RoHS	470	±10%	25	2.4	1.3	0.38	0.796
LH L 08□561K	RoHS	560	±10%	25	2.2	1.5	0.35	0.796
LH L 08□681K	RoHS	680	±10%	25	2.0	1.8	0.32	0.796
LH L 08□821K	RoHS	820	±10%	30	1.6	2.3	0.30	0.796
LH L 08□102J	RoHS	1000	±5%	55	1.5	2.7	0.25	0.252
LH L 08□122J	RoHS	1200	±5%	45	1.4	3.2	0.22	0.252
LH L 08□152J	RoHS	1500	±5%	55	1.3	4.1	0.20	0.252
LH L 08□182J	RoHS	1800	±5%	55	1.2	4.8	0.19	0.252
LH L 08□222J	RoHS	2200	±5%	55	1.1	5.6	0.16	0.252
LH L 08□272J	RoHS	2700	±5%	55	1.0	7.5	0.15	0.252
LH L 08□332J	RoHS	3300	±5%	55	0.85	8.5	0.14	0.252
LH L 08□392J	RoHS	3900	±5%	55	0.78	9.7	0.11	0.252
LH L 08□472J	RoHS	4700	±5%	65	0.68	14	0.10	0.252
LH L 08□562J	RoHS	5600	±5%	65	0.62	16	0.093	0.252
LH L 08□682J	RoHS	6800	±5%	65	0.61	18	0.092	0.252
LH L 08□822J	RoHS	8200	±5%	65	0.60	20	0.084	0.252
LH L 08□103J	RoHS	10000	±5%	60	0.48	32	0.070	L:1kHz, Q:0.0796MHz
LH L 08□123J	RoHS	12000	±5%	60	0.44	36	0.064	L:1kHz, Q:0.0796MHz
LH L 08□153J	RoHS	15000	±5%	60	0.35	62	0.051	L:1kHz, Q:0.0796MHz
LH L 08□183J	RoHS	18000	±5%	60	0.30	72	0.048	L:1kHz, Q:0.0796MHz
LH L 08□223J	RoHS	22000	±5%	60	0.28	82	0.044	L:1kHz, Q:0.0796MHz
LH L 08□273J	RoHS	27000	±5%	60	0.25	90	0.042	L:1kHz, Q:0.0796MHz
LH L 08□333J	RoHS	33000	±5%	60	0.23	100	0.040	L:1kHz, Q:0.0796MHz

・□ Please specify the packaging code. (TB: Taping, NB: Bulk)

▶ This catalog contains the typical specification only due to the limitation of space. When you consider the purchase of our products, please check our product specification sheets. For details of each product (characteristics graph, reliability information, precautions for use, and so on), see our website (http://www.ty-top.com/) .

■PARTS NUMBER

●LHL10

Parts number	EHS	Nominal inductance [μH]	Inductance tolerance	Q (min.)	Self-resonant frequency [MHz] (min..)	DC Resistance [Ω] (max.)	Rated current [A] (max.)	Measuring frequency [MHz]
LH L 10□3R3M	RoHS	3.3	±20%	50	46	0.019	4.2	7.96
LH L 10□3R9M	RoHS	3.9	±20%	50	40	0.022	4.1	7.96
LH L 10□4R7M	RoHS	4.7	±20%	50	38	0.024	4.0	7.96
LH L 10□5R6M	RoHS	5.6	±20%	50	34	0.025	3.8	7.96
LH L 10□6R8M	RoHS	6.8	±20%	50	30	0.028	3.4	7.96
LH L 10□8R2M	RoHS	8.2	±20%	50	24	0.031	3.3	7.96
LH L 10□100K	RoHS	10	±10%	90	19	0.034	3.2	2.52
LH L 10□120K	RoHS	12	±10%	90	16	0.038	2.8	2.52
LH L 10□150K	RoHS	15	±10%	90	12	0.042	2.6	2.52
LH L 10□180K	RoHS	18	±10%	90	9.2	0.046	2.4	2.52
LH L 10□220K	RoHS	22	±10%	60	8.6	0.061	2.1	2.52
LH L 10□270K	RoHS	27	±10%	60	7.1	0.069	2.0	2.52
LH L 10□330K	RoHS	33	±10%	60	6.8	0.078	1.9	2.52
LH L 10□390K	RoHS	39	±10%	60	6.7	0.085	1.8	2.52
LH L 10□470K	RoHS	47	±10%	50	6.2	0.093	1.7	2.52
LH L 10□560K	RoHS	56	±10%	50	5.2	0.10	1.6	2.52
LH L 10□680K	RoHS	68	±10%	40	4.9	0.12	1.5	2.52
LH L 10□820K	RoHS	82	±10%	40	4.7	0.13	1.4	2.52
LH L 10□101K	RoHS	100	±10%	40	3.8	0.18	1.2	0.796
LH L 10□121K	RoHS	120	±10%	40	3.2	0.25	1.0	0.796
LH L 10□151K	RoHS	150	±10%	40	2.9	0.29	0.95	0.796
LH L 10□181K	RoHS	180	±10%	40	2.6	0.40	0.80	0.796
LH L 10□221K	RoHS	220	±10%	40	2.3	0.44	0.75	0.796
LH L 10□271K	RoHS	270	±10%	30	2.1	0.50	0.70	0.796
LH L 10□331K	RoHS	330	±10%	30	2.0	0.56	0.68	0.796
LH L 10□391K	RoHS	390	±10%	30	1.8	0.62	0.63	0.796
LH L 10□471K	RoHS	470	±10%	30	1.7	0.84	0.57	0.796
LH L 10□561K	RoHS	560	±10%	30	1.5	0.93	0.52	0.796
LH L 10□681K	RoHS	680	±10%	30	1.4	1.0	0.48	0.796
LH L 10□821K	RoHS	820	±10%	30	1.3	1.4	0.42	0.796
LH L 10□102J	RoHS	1000	±5%	50	1.2	1.8	0.41	0.252
LH L 10□122J	RoHS	1200	±5%	50	0.87	2.3	0.33	0.252
LH L 10□152J	RoHS	1500	±5%	50	0.83	2.7	0.30	0.252
LH L 10□182J	RoHS	1800	±5%	50	0.75	3.0	0.29	0.252
LH L 10□222J	RoHS	2200	±5%	50	0.70	3.9	0.25	0.252
LH L 10□272J	RoHS	2700	±5%	50	0.67	4.3	0.24	0.252
LH L 10□332J	RoHS	3300	±5%	50	0.56	5.8	0.21	0.252
LH L 10□392J	RoHS	3900	±5%	50	0.54	6.4	0.20	0.252
LH L 10□472J	RoHS	4700	±5%	50	0.49	7.1	0.19	0.252
LH L 10□562J	RoHS	5600	±5%	50	0.41	9.0	0.17	0.252
LH L 10□682J	RoHS	6800	±5%	50	0.38	10	0.16	0.252
LH L 10□822J	RoHS	8200	±5%	50	0.36	12	0.15	0.252
LH L 10□103J	RoHS	10000	±5%	60	0.29	19	0.12	L:1kHz, Q:0.0796MHz
LH L 10□123J	RoHS	12000	±5%	60	0.27	21	0.11	L:1kHz, Q:0.0796MHz
LH L 10□153J	RoHS	15000	±5%	60	0.24	34	0.090	L:1kHz, Q:0.0796MHz
LH L 10□183J	RoHS	18000	±5%	60	0.21	38	0.081	L:1kHz, Q:0.0796MHz
LH L 10□223J	RoHS	22000	±5%	60	0.20	43	0.075	L:1kHz, Q:0.0796MHz
LH L 10□273J	RoHS	27000	±5%	40	0.15	67	0.060	L:1kHz, Q:0.0796MHz
LH L 10□333J	RoHS	33000	±5%	40	0.14	76	0.056	L:1kHz, Q:0.0796MHz
LH L 10□393J	RoHS	39000	±5%	40	0.13	84	0.053	L:1kHz, Q:0.0796MHz
LH L 10□473J	RoHS	47000	±5%	40	0.12	96	0.050	L:1kHz, Q:0.0796MHz
LH L 10□563J	RoHS	56000	±5%	30	0.10	170	0.036	L:1kHz, Q:0.0796MHz
LH L 10□683J	RoHS	68000	±5%	30	0.095	200	0.035	L:1kHz, Q:0.0796MHz
LH L 10□823J	RoHS	82000	±5%	30	0.088	210	0.033	L:1kHz, Q:0.0796MHz
LH L 10□104J	RoHS	100000	±5%	30	0.085	240	0.031	L:1kHz, Q:0.0252MHz
LH L 10□124J	RoHS	120000	±5%	30	0.070	260	0.030	L:1kHz, Q:0.0252MHz
LH L 10□154J	RoHS	150000	±5%	30	0.069	300	0.028	L:1kHz, Q:0.0252MHz

・□ Please specify the packaging code. (TB: Taping, NB: Bulk)

▶ This catalog contains the typical specification only due to the limitation of space. When you consider the purchase of our products, please check our product specification sheets. For details of each product (characteristics graph, reliability information, precautions for use, and so on), see our website (http://www.ty-top.com/) .

●LHLC08

Parts number	EHS	Nominal inductance [μH]	Inductance tolerance	Q (min.)	Self-resonant frequency [MHz] (min..)	DC Resistance [Ω] (max.)	Rated current [A] (max.)	Measuring frequency [MHz]
LH LC08□1R0N	RoHS	1.0	±30%	40	76	0.013	5.4	7.96
LH LC08□1R5M	RoHS	1.5	±20%	40	65	0.014	5.2	7.96
LH LC08□2R2M	RoHS	2.2	±20%	40	56	0.017	4.8	7.96
LH LC08□2R7M	RoHS	2.7	±20%	40	48	0.019	4.2	7.96
LH LC08□3R3M	RoHS	3.3	±20%	40	41	0.021	3.8	7.96
LH LC08□3R9M	RoHS	3.9	±20%	40	33	0.024	3.7	7.96
LH LC08□4R7M	RoHS	4.7	±20%	40	30	0.025	3.6	7.96
LH LC08□5R6M	RoHS	5.6	±20%	40	23	0.028	3.5	7.96
LH LC08□6R8M	RoHS	6.8	±20%	40	21	0.030	3.4	7.96
LH LC08□8R2M	RoHS	8.2	±20%	40	19	0.034	3.0	7.96
LH LC08□100K	RoHS	10	±10%	65	17	0.041	2.9	2.52
LH LC08□120K	RoHS	12	±10%	65	16	0.044	2.8	2.52
LH LC08□150K	RoHS	15	±10%	50	13	0.053	2.6	2.52
LH LC08□180K	RoHS	18	±10%	50	12	0.060	2.4	2.52
LH LC08□220K	RoHS	22	±10%	50	11	0.068	2.3	2.52
LH LC08□270K	RoHS	27	±10%	50	10	0.091	2.0	2.52
LH LC08□330K	RoHS	33	±10%	40	8.8	0.10	1.9	2.52
LH LC08□390K	RoHS	39	±10%	40	8.4	0.12	1.7	2.52
LH LC08□470K	RoHS	47	±10%	40	8.2	0.15	1.5	2.52
LH LC08□560K	RoHS	56	±10%	40	7.9	0.17	1.4	2.52
LH LC08□680K	RoHS	68	±10%	35	7.0	0.20	1.3	2.52
LH LC08□820K	RoHS	82	±10%	35	6.5	0.22	1.2	2.52
LH LC08□101K	RoHS	100	±10%	25	5.7	0.32	1.0	0.796
LH LC08□121K	RoHS	120	±10%	25	5.2	0.36	0.96	0.796
LH LC08□151K	RoHS	150	±10%	20	4.7	0.41	0.88	0.796
LH LC08□181K	RoHS	180	±10%	35	4.2	0.66	0.71	0.796
LH LC08□221K	RoHS	220	±10%	35	3.7	0.73	0.66	0.796
LH LC08□271K	RoHS	270	±10%	25	3.5	0.85	0.63	0.796
LH LC08□331K	RoHS	330	±10%	25	3.2	0.97	0.59	0.796
LH LC08□391K	RoHS	390	±10%	20	2.9	1.1	0.55	0.796
LH LC08□471K	RoHS	470	±10%	25	2.4	1.3	0.49	0.796
LH LC08□561K	RoHS	560	±10%	25	2.2	1.5	0.47	0.796
LH LC08□681K	RoHS	680	±10%	25	2.0	1.8	0.44	0.796
LH LC08□821K	RoHS	820	±10%	30	1.6	2.3	0.38	0.796
LH LC08□102J	RoHS	1000	±5%	55	1.5	2.7	0.35	0.252
LH LC08□122J	RoHS	1200	±5%	45	1.4	3.2	0.31	0.252
LH LC08□152J	RoHS	1500	±5%	55	1.3	4.1	0.29	0.252
LH LC08□182J	RoHS	1800	±5%	55	1.2	4.8	0.26	0.252
LH LC08□222J	RoHS	2200	±5%	55	1.1	5.6	0.23	0.252
LH LC08□272J	RoHS	2700	±5%	55	1.0	7.5	0.21	0.252
LH LC08□332J	RoHS	3300	±5%	55	0.85	8.5	0.19	0.252
LH LC08□392J	RoHS	3900	±5%	55	0.78	9.7	0.18	0.252
LH LC08□472J	RoHS	4700	±5%	65	0.68	14	0.16	0.252
LH LC08□562J	RoHS	5600	±5%	65	0.62	16	0.15	0.252
LH LC08□682J	RoHS	6800	±5%	65	0.61	18	0.14	0.252
LH LC08□822J	RoHS	8200	±5%	65	0.60	20	0.13	0.252
LH LC08□103J	RoHS	10000	±5%	60	0.48	32	0.11	L:1kHz, Q:0.0796MHz
LH LC08□123J	RoHS	12000	±5%	60	0.44	36	0.084	L:1kHz, Q:0.0796MHz
LH LC08□153J	RoHS	15000	±5%	60	0.35	62	0.068	L:1kHz, Q:0.0796MHz
LH LC08□183J	RoHS	18000	±5%	60	0.30	72	0.066	L:1kHz, Q:0.0796MHz
LH LC08□223J	RoHS	22000	±5%	60	0.28	82	0.057	L:1kHz, Q:0.0796MHz
LH LC08□273J	RoHS	27000	±5%	60	0.25	90	0.054	L:1kHz, Q:0.0796MHz
LH LC08□333J	RoHS	33000	±5%	60	0.23	100	0.053	L:1kHz, Q:0.0796MHz

・□ Please specify the packaging code. (TB: Taping, NB: Bulk)

▶ This catalog contains the typical specification only due to the limitation of space. When you consider the purchase of our products, please check our product specification sheets. For details of each product (characteristics graph, reliability information, precautions for use, and so on), see our website (http://www.ty-top.com/) .

■PARTS NUMBER

●LHLC10

Parts number	EHS	Nominal inductance [μH]	Inductance tolerance	Q (min.)	Self-resonant frequency [MHz] (min..)	DC Resistance [Ω] (max.)	Rated current [A] (max.)	Measuring frequency [MHz]
LH LC10□3R3M	RoHS	3.3	±20%	50	46	0.019	5.0	7.96
LH LC10□3R9M	RoHS	3.9	±20%	50	40	0.022	4.8	7.96
LH LC10□4R7M	RoHS	4.7	±20%	50	38	0.024	4.7	7.96
LH LC10□5R6M	RoHS	5.6	±20%	50	34	0.025	4.5	7.96
LH LC10□6R8M	RoHS	6.8	±20%	50	30	0.028	4.1	7.96
LH LC10□8R2M	RoHS	8.2	±20%	50	24	0.031	3.9	7.96
LH LC10□100K	RoHS	10	±10%	90	19	0.034	3.6	2.52
LH LC10□120K	RoHS	12	±10%	90	16	0.038	3.4	2.52
LH LC10□150K	RoHS	15	±10%	90	12	0.042	3.2	2.52
LH LC10□180K	RoHS	18	±10%	90	9.2	0.046	3.0	2.52
LH LC10□220K	RoHS	22	±10%	60	8.6	0.061	2.8	2.52
LH LC10□270K	RoHS	27	±10%	60	7.1	0.069	2.7	2.52
LH LC10□330K	RoHS	33	±10%	60	6.8	0.078	2.6	2.52
LH LC10□390K	RoHS	39	±10%	60	6.7	0.085	2.4	2.52
LH LC10□470K	RoHS	47	±10%	50	6.2	0.093	2.3	2.52
LH LC10□560K	RoHS	56	±10%	50	5.2	0.10	2.1	2.52
LH LC10□680K	RoHS	68	±10%	40	4.6	0.12	2.0	2.52
LH LC10□820K	RoHS	82	±10%	40	4.7	0.13	1.8	2.52
LH LC10□101K	RoHS	100	±10%	40	3.8	0.18	1.5	0.796
LH LC10□121K	RoHS	120	±10%	40	3.2	0.25	1.3	0.796
LH LC10□151K	RoHS	150	±10%	40	2.9	0.29	1.2	0.796
LH LC10□181K	RoHS	180	±10%	40	2.6	0.40	1.0	0.796
LH LC10□221K	RoHS	220	±10%	40	2.3	0.44	0.97	0.796
LH LC10□271K	RoHS	270	±10%	30	2.1	0.50	0.90	0.796
LH LC10□331K	RoHS	330	±10%	30	2.0	0.56	0.86	0.796
LH LC10□391K	RoHS	390	±10%	30	1.8	0.62	0.75	0.796
LH LC10□471K	RoHS	470	±10%	30	1.7	0.84	0.65	0.796
LH LC10□561K	RoHS	560	±10%	30	1.5	0.93	0.61	0.796
LH LC10□681K	RoHS	680	±10%	30	1.4	1.0	0.57	0.796
LH LC10□821K	RoHS	820	±10%	30	1.3	1.4	0.50	0.796
LH LC10□102J	RoHS	1000	±5%	50	1.2	1.8	0.48	0.252
LH LC10□122J	RoHS	1200	±5%	50	0.87	2.3	0.40	0.252
LH LC10□152J	RoHS	1500	±5%	50	0.83	2.7	0.37	0.252
LH LC10□182J	RoHS	1800	±5%	50	0.75	3.0	0.36	0.252
LH LC10□222J	RoHS	2200	±5%	50	0.70	3.9	0.32	0.252
LH LC10□272J	RoHS	2700	±5%	50	0.67	4.3	0.30	0.252
LH LC10□332J	RoHS	3300	±5%	50	0.56	5.8	0.26	0.252
LH LC10□392J	RoHS	3900	±5%	50	0.54	6.4	0.25	0.252
LH LC10□472J	RoHS	4700	±5%	50	0.49	7.1	0.24	0.252
LH LC10□562J	RoHS	5600	±5%	50	0.41	9.0	0.21	0.252
LH LC10□682J	RoHS	6800	±5%	50	0.38	10	0.20	0.252
LH LC10□822J	RoHS	8200	±5%	50	0.36	12	0.18	0.252
LH LC10□103J	RoHS	10000	±5%	60	0.29	19	0.14	L:1kHz, Q:0.0796MHz
LH LC10□123J	RoHS	12000	±5%	60	0.27	21	0.13	L:1kHz, Q:0.0796MHz
LH LC10□153J	RoHS	15000	±5%	60	0.24	34	0.11	L:1kHz, Q:0.0796MHz
LH LC10□183J	RoHS	18000	±5%	60	0.21	38	0.10	L:1kHz, Q:0.0796MHz
LH LC10□223J	RoHS	22000	±5%	60	0.20	43	0.095	L:1kHz, Q:0.0796MHz
LH LC10□273J	RoHS	27000	±5%	40	0.15	67	0.076	L:1kHz, Q:0.0796MHz
LH LC10□333J	RoHS	33000	±5%	40	0.14	76	0.068	L:1kHz, Q:0.0796MHz
LH LC10□393J	RoHS	39000	±5%	40	0.13	84	0.065	L:1kHz, Q:0.0796MHz
LH LC10□473J	RoHS	47000	±5%	40	0.12	96	0.061	L:1kHz, Q:0.0796MHz
LH LC10□563J	RoHS	56000	±5%	30	0.10	170	0.045	L:1kHz, Q:0.0796MHz
LH LC10□683J	RoHS	68000	±5%	30	0.095	200	0.043	L:1kHz, Q:0.0796MHz
LH LC10□823J	RoHS	82000	±5%	30	0.088	210	0.041	L:1kHz, Q:0.0796MHz
LH LC10□104J	RoHS	100000	±5%	30	0.085	240	0.038	L:1kHz, Q:0.0252MHz
LH LC10□124J	RoHS	120000	±5%	30	0.070	260	0.037	L:1kHz, Q:0.0252MHz
LH LC10□154J	RoHS	150000	±5%	30	0.069	300	0.035	L:1kHz, Q:0.0252MHz

・□ Please specify the packaging code. (TB: Taping, NB: Bulk)

▶ This catalog contains the typical specification only due to the limitation of space. When you consider the purchase of our products, please check our product specification sheets. For details of each product (characteristics graph, reliability information, precautions for use, and so on), see our website (http://www.ty-top.com/) .

RADIAL LEADED INDUCTORS

■PACKAGING

①Minimum Quantity

Type (EIA)	Standard quantity [pcs]	
	Bulk	Taped
LHL 08	100	1000
LHL 10	50	500
LHLC08	100	1000
LHLC10	50	500

②Bulk dimensions

●LHL08, LHL10

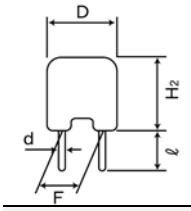

Type	Dimensions				
	ϕD (max)	H_2 (max)	F*	ℓ	ϕd
LHL08	9.0 (0.354)	9.5 (0.374)	5.0±1.0 (0.197±0.039)	5.0±1.0 (0.197±0.039)	0.6±0.05 (0.024±0.002)
LHL10	11.0 (0.433)	14.0 (0.551)	5.0±1.0 (0.197±0.039)	5.0±1.0 (0.197±0.039)	0.6±0.05 (0.024±0.002)

Unit : mm (inch)

*Measured at the base of the leads.

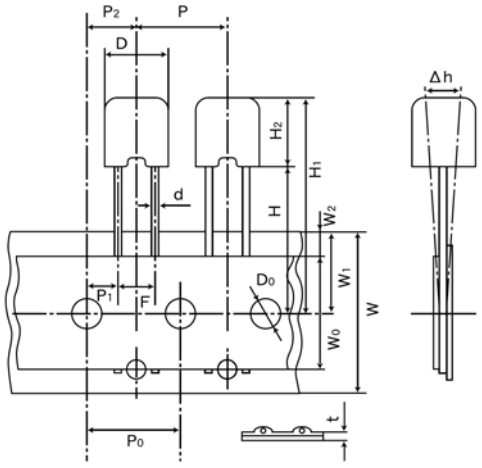

	LHL08	LHL10
D	ϕ9.0 max (ϕ0.354 max)	ϕ11.0 max (ϕ0.433 max)
H_1	30.5 max (1.20 max)	34.0 max (1.34 max)
H	18.0+2.0/−0.0 (0.709+0.079/−0.000)	18.0+2.0/−0.0 (0.709+0.079/−0.000)
H_2	9.5 max (0.374 max)	14.0 max (0.551 max)
P	12.7±1.0 (0.500±0.039)	12.7±1.0 (0.500±0.039)
P_0	12.7±0.3※1 (0.500±0.012)	12.7±0.3※1 (0.500±0.012)
P_1	3.85±0.7 (0.152±0.028)	3.85±0.7 (0.152±0.028)
P_2	6.35±1.3 (0.250±0.051)	6.35±1.3 (0.250±0.051)
F	5.0+0.8/−0.2 (0.197+0.031/0.008)	5.0+0.8/−0.2 (0.197+0.031/−0.008)
h	0.0±2.0 (0.0±0.079)	0.0±2.0 (0.0±0.079)
W	18.0+1.0/−0.5 (0.709+0.039/−0.020)	18.0+1.0/−0.5 (0.709+0.039/−0.020)
W_0	12.5 min (0.492 min)	12.5 min (0.492 min)
W_1	9.0±0.5 (0.354±0.020)	9.0±0.5 (0.354±0.020)
W_2	3.0 max※2 (0.118 max)	3.0 max※2 (0.118 max)
D_0	ϕ4.0±0.2 (ϕ0.158±0.008)	ϕ4.0±0.2 (ϕ0.158±0.008)
ϕd	ϕ0.6±0.05 (ϕ0.024±0.002)	ϕ0.6±0.05 (ϕ0.024±0.002)
t	0.6±0.3 (0.024±0.012)	0.6±0.3 (0.024±0.012)

Unit : mm (inch)

※1 Accumulated error for 20 pitches is 1mm.
※2 Bonding tape must not protrude from the base tape.

▸ This catalog contains the typical specification only due to the limitation of space. When you consider the purchase of our products, please check our specification.
For details of each product (characteristics graph, reliability information, precautions for use, and so on), see our Web site (http://www.ty-top.com/) .

LHLC08, LHLC10

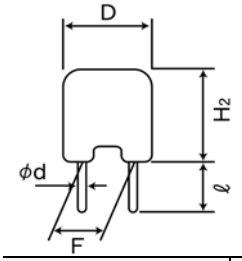

Type	Dimensions				
	φD (max)	H_2 (max)	F*	ℓ	φd
LHLC08	9.0 (0.354)	9.5 (0.374)	5.0±1.0 (0.197±0.039)	5.0±1.0 (0.197±0.039)	0.6±0.05 (0.024±0.002)
LHLC10	11.0 (0.433)	14.0 (0.551)	5.0±1.0 (0.197±0.039)	5.0±1.0 (0.197±0.039)	0.6±0.05 (0.024±0.002)

Unit : mm (inch)

*Measured at the base of the leads.

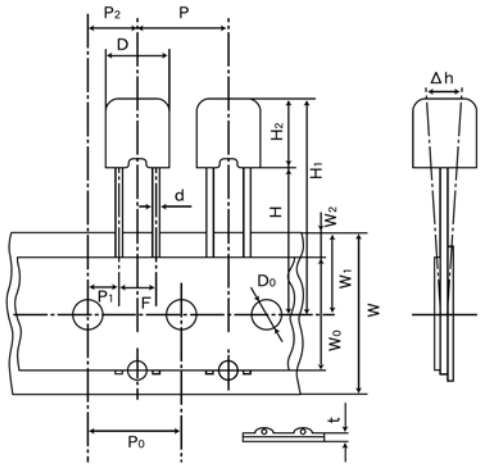

	LHLC08	LHLC10
D	φ9.0max (φ0.354max)	φ11.0max (φ0433max)
H_1	30.5max (1.20max)	34.0max (1.34max)
H	18.0+2.0/−0.0 (0.709+0.079/−0.000)	18.0+2.0/−0.0 (0.709+0.079/−0.000)
H_2	9.5max (0.374max)	14.0max (0.551max)
P	12.7±1.0 (0.500±0.039)	12.7±1.0 (0.500±0.039)
P_0	12.7±0.3※1 (0.500±0.012)	12.7±0.3※1 (0.500±0.012)
P_1	3.85±0.7 (0.152±0.028)	3.85±0.7 (0.152±0.028)
P_2	6.35±1.3 (0.250±0.051)	6.35±1.3 (0.250±0.051)
F	5.0+0.8/−0.2 (0.197+0.031/−0.008)	5.0+0.8/−0.2 (0.197+0.031/−0.008)
H	0.0±2.0 (0.0±0.079)	0.0±2.0 (0.0±0.079)
W	18.0+1.0/−0.5 (0.709+0.039/−0.020)	18.0+1.0/−0.5 (0.709+0.039/−0.020)
W_0	12.5min (0.492min)	12.5min (0.492min)
W_1	9.0±0.5 (0.354±0.020)	9.0±0.5 (0.354±0.020)
W_2	3.0max※2 (0.118max)	3.0max※2 (0.118max)
D_0	φ4.0±0.2 (φ0.158±0.008)	φ4.0±0.2 (φ0.158±0.008)
φd	φ0.6±0.05 (φ0.024±0.002)	φ0.6±0.05 (φ0.024±0.002)
t	0.6±0.3 (0.024±0.012)	0.6±0.3 (0.024±0.012)

Unit : mm (inch)

※1 Accumulated error for 20 pitches is 1mm.

※2 Bonding tape must not protrude from the base tape.

▸ This catalog contains the typical specification only due to the limitation of space. When you consider the purchase of our products, please check our specification.
For details of each product (characteristics graph, reliability information, precautions for use, and so on), see our Web site (http://www.ty-top.com/) .

AXIAL LEADED INDUCTORS(CAL Type)、
RADIAL LEADED INDUCTORS(LH Type)、
LEADED FERRITE BEAD INDUCTORS(FB Series A Type／R Type)

■RELIABILITY DATA

1. Operating temperature Range		
Specified Value	CAL45 Type LHL□□□ FBA/FBR	−25～＋ 105℃
Test Methods and Remarks	CAL45 Type LHL□□□ FBA/FBR	Including self-generated heat

2. Storage temperature Range		
Specified Value	CAL45 Type LHL□□□ FBA/FBR	−40～＋ 85℃(Except for taping condition)

3. Rated current		
Specified Value	CAL45 Type LHL□□□ FBA/FBR	Within the specified tolerance
Test Methods and Remarks	CAL45 Type : The maximum DC value having inductance within 10% and temperature increase within 40℃ by the application of DC bias. LHL□□□ : The maximum DC value having inductance decrease within 10% (LHLC08, LHLC10:within 30%) and temperature increase within the following specified temperature by the application of DC bias. Reference temperature : 25℃(LHL08, LHL10) : 40℃(LHLC08, LHLC10) FBA/FBR : No disconnection or appearance abnormality by continuous current application for 30 min. Change after the application shall be within ±20% of the initial value. This is not guaranteed for electrical characteristics during current application.	

4. Impedance		
Specified Value	CAL45 Type	
	LHL□□□	
	FBA/FBR	Within the specified tolerance
Test Methods and Remarks	FBA/FBR : Measuring equipment : Impedance analyzer (HP4191A) or its equivalent Measuring frequency : Specified frequency	

5. Inductance		
Specified Value	CAL45 Type LHL□□□	Within the specified tolerance
	FBA/FBR	
Test Methods and Remarks	CAL45 Type : Measuring equipment : LCR meter (HP4285A + HP42851A or its equivalent) Measuring frequency : Specified frequency LHL□□□ : Measuring equipment : LCR meter (HP4285A＋HP42851A or its equivalent) : LCR meter (HP4263A) or its equivalent (at 1kHz) Measuring frequency : Specified frequency	

6. Q

Specified Value	CAL45 Type	
	LHL□□□	Within the specified tolerance
	FBA/FBR	
Test Methods and Remarks	LHL□□□ Measuring equipment : LCR meter (HP4285A＋HP42851A or its equivalent) : LCR meter (HP4263A) or its equivalent (at 1kHz) Measuring frequency : Specified frequency	

7. DC Resistance

Specified Value	CAL45 Type	Within the specified tolerance
	LHL□□□	
	FBA/FBR	
Test Methods and Remarks	Measuring equipment : DC ohmmeter	

8. Self resonance frequency

Specified Value	CAL45 Type	
	LHL□□□	Within the specified tolerance
	FBA/FBR	
Test Methods and Remarks	LHL□□□ Measuring equipment : (HP4191A, 4192A) its equivalent	

9. Temperature characteristic

Specified Value	CAL45 Type	
	LHL□□□	△L/L : Within ±7%
	FBA/FBR	

Test Methods and Remarks

Change of maximum inductance deviation in step 1 to 5

Step	Temperature (℃)
	LHL□□□
1	20
2	Minimum operating temperature
3	20 (Standard temperature)
4	Maximum operating temperature
5	20

10. Tensile strength test

Specified Value	CAL45 Type	No abnormality such as cut lead, or looseness.
	LHL□□□	
	FBA/FBR	

Test Methods and Remarks

CAL45 Type : Apply the stated tensile force progressively in the direction to draw terminal.

force (N)	duration (s)
10	10

LHL□□□ : Apply the stated tensile force progressively in the direction to draw terminal.

Nominal wire diameter tensile ϕd (mm)	force (N)	duration (s)
0.3＜ϕd≦0.5	5	30±5
0.5＜ϕd≦0.8	10	
0.8＜ϕd≦1.2	25	

FBA/FBR : The body of a component shall be fixed and a tensile force of 20±1N shall be applied to the lead wire in the axial direction of the component during 10±1 seconds.

11. Over current		
Specified Value	CAL45 Type	No emission of smoke no firing.
	LHL□□□	There shall be no scorch or short of wire. LHLC08, LHLC10 : There shall be no firing.
	FBA/FBR	
Test Methods and Remarks	LHL□□□・CAL45 Type : Measuring current : Rated current×2 Duration : 5 min. Number of measuring : one time	

12. Terminal strength : bending		
Specified Value	CAL45 Type	No abnormality such as cut lead, or looseness.
	LHL□□□	
	FBA/FBR	

Test Methods and Remarks

CAL45 Type :

Suspend a weight of specified mass at the end of the terminals and incline the body through the angle of 90 degrees and return it to the initial position. This operation is done over a period of 2-3 sec. Then second bend in the opposite direction shall be made.

Number of bends : Two times.

Nominal wire diameter tensile	Bending force	Mass reference weight
0.3< φ d≦0.5	2.5	0.25
0.5< φ d≦0.8	5	0.50

LHL□□□・FBA/FBR :

Suspend a weight of specified mass at the end of the terminals and incline the body through the angle of 90 degrees and return it to the initial position. This operation is done over a period of 2-3 sec. Then second bend in the opposite direction shall be made.

Number of bends : Two times.

Nominal wire diameter tensile	Bending force	Mass reference weight
0.3< φd≦0.5	2.5	0.25
0.5< φd≦0.8	5	0.5
0.8< φd≦1.2	10	1.0

13. Insulation resistance : between the terminals and body		
Specified Value	CAL45 Type	
	LHL□□□	100MΩmin.
	FBA/FBR	
Test Methods and Remarks	LHL□□□ : Applied voltage : 500 VDC Duration : 60 sec.	

14. Insulation resistance : between terminals and core		
Specified Value	CAL45 Type	
	LHL□□□	
	FBA/FBR	1MΩmin.
Test Methods and Remarks	FBA/FBR : Applied voltage : 100 VDC Duration : 60±5 sec.	

15. Withstanding : between the terminals and body		
Specified Value	CAL45 Type	
	LHL□□□	No abnormality such as insulation damage
	FBA/FBR	
Test Methods and Remarks	LHL□□□ : According to JIS C5101-1. Metal global method Applied voltage : 500 VDC Duration : 60 sec.	

16. DC bias characteristic		
Specified Value	CAL45 Type	ΔL/L : Within －10%
	LHL□□□	
	FBA/FBR	
Test Methods and Remarks	CAL45 Type : Measure inductance with application of rated current using LCR meter to compare it with the initial value.	

17. Body strength		
Specified Value	CAL45 Type	No abnormality as damage.
	LHL□□□	
	FBA/FBR	No abnormality such as cracks on body.
Test Methods and Remarks	CAL45 Type : Applied force :50N Duration : 10 sec. Speed : Shall attain to specified force in 2 sec. FBA : Applied force : 50±3N Duration : 30±1 sec. 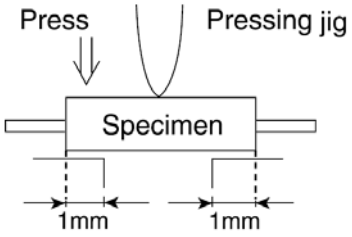 	

18. Resistance to vibration		
Specified Value	CAL45 Type	ΔL/L : Within ±5%
	LHL□□□	Appearance : No abnormality ΔL/L : Within ±5% Q change : Within ±30%
	FBA/FBR	Appearance : No abnormality Impedance change : Within ±20%
Test Methods and Remarks	CAL45 Type : Directions : 2 hrs each in X, Y and Z directions total : 6hrs. Frequency range : 10 to 55 to 10Hz (1min.) Amplitude : 1.5mm Mounting method : Soldering onto printed board. Recovery : At least 1hr of recovery under the standard condition after the test, followed by the measurement within 2hrs. LHL□□□・FBA/FBR : Directions : 2 hrs each in X, Y and Z directions total : 6hrs. Frequency range : 10 to 55 to 10Hz (1min.) Amplitude : 1.5mm Mounting method : Soldering onto printed board.	

19. Resistance to shock		
Specified Value	CAL45 Type	No significant abnormality in appearance
	LHL□□□	
	FBA/FBR	
Test Methods and Remarks	CAL45 Type : Drop test Impact material : concrete or vinyl tile Height : 1m Total number of drops : 10 times	

20. Solderability

Specified Value	CAL45 Type	At least 75% of terminal electrode is covered by new solder.
	LHL□□□	At least 75% of terminal electrode is covered by new solder.
	FBA/FBR	At least 90% of terminal electrode is covered by new solder.
Test Methods and Remarks	CAL45 Type : Solder temperature : 230±5℃ Duration : 2±0.5 sec. LHL□□□ : Solder temperature : 235±5℃ Duration : 2±0.5 sec. Immersion depth : Up to 1.5mm from bottom of case. FBA/FBR : Solder temperature : 230±5℃ Duration : 3±1 sec. Immersion depth : Up to 1.5mm from terminal root.	

21. Resistance to soldering heat

Specified Value	CAL45 Type	△L/L : Within ±5%
	LHL□□□	No significant abnormality in appearance Inductance change : Within ±5% Q change : Within ±30%
	FBA/FBR	No significant abnormality in appearance Impedance change : Within ±20%
Test Methods and Remarks	CAL45 Type : Solder temperature : 270±5℃ Duration : 5±0.5 sec. One time Immersed conditions : Inserted into substrate with t=1.6mm Recovery : At least 1hr of recovery under the standard condition after the test, followed by the measurement within 2hrs. LHL□□□ : Solder bath method : Solder temperature : 260±5℃ Duration : 10±1 sec. : Up to 1.5mm from the bottom of case. Manual soldering : Solder temperature : 350±10℃ (At the tip of soldering iron) Duration : 5±1 sec. : Up to 1.5mm from the bottom of case. Caution : No excessive pressing shall be applied to terminals. Recovery : 1 to 2hrs of recovery under the standard condition after the test. FBA/FBR : Solder bath method: Condition 1: Solder temperature : 260±5℃ Duration : 10±1 sec. Immersion depth : Up to 1.5mm from the terminal root. Condition 2 : Solder temperature : 350±5℃ Duration : 3±1 sec. Immersion depth : Up to 1.5mm from the terminal root. Recovery : 3hrs of recovery under the standard condition after the test.	

22. Resistance to solvent

Specified Value	CAL45 Type	Please avoid the ultrasonic cleaning of this product.
	LHL□□□	
	FBA/FBR	No significant abnormality in appearance Impedance change : Within ±20%
Test Methods and Remarks	FBA/FBR : Solvent temperature : 20～25℃ Duration : 30±5 sec. Solvent type : Acetone Recovery : 3hrs of recovery under the standard condition after the test.	

23. Thermal shock

Specified Value	CAL45 Type	△L/L : Within ±10%
	LHL□□□	Appearance : No abnormality Inductance change : Within ±10% Q change : Within ±30%
	FBA/FBR	Appearance : No abnormality Impedance change : Within ±20%

Test Methods and Remarks

CAL45 Type : Conditions for 1cycle

Step	Temperature (℃)	Duration (min.)
1	−25+0/−3	30±3
2	Room temperature	Within 3
3	+85+2/−0	30±3
4	Room temperature	Within 3

Number of cycles : 5 cycles
Recovery : At least 1hr of recovery under the standard condition after the removal from test chamber, followed by the measurement within 2hrs.

LHL□□□・FBA/FBR: According to JIS C60068-2-14.
Conditions for 1 cycle

Step	Temperature (℃)	Duration (min.)
1	Minimum operating temperature	30±3
2	Room temperature	Within 3
3	Maximum operating temperature	30±3
4	Room temperature	Within 3

Number of cycles : 10 cycles〔LHL□□□〕
Recovery : 5 cycles (FBA/ FBR)
: 1 to 2hrs of recovery under the standard condition after the removal from the test chamber.〔LHL□□□〕
: 3hrs of recovery under the standard condition after the removal from the test chamber. (FBA/ FBR)

24. Damp heat

Specified Value	CAL45 Type	△L/L : Within ±10%
	LHL□□□	
	FBA/FBR	Appearance : No abnormality Impedance change : Within ±20%

Test Methods and Remarks

CAL45 Type :
Temperature : 40±2℃
Humidity : 90～95%RH
Duration : 1000 hrs
Recovery : At least 1hr of recovery under the standard removal from test chamber, followed by the measurement within 2hrs.

FBA/FBR :
Temperature : 60±2℃
Humidity : 90～95%RH
Duration : 1000 hrs
Recovery : 3hrs of recovery under the standard condition after the removal from the test chamber.

25. Loading under damp heat		
Specified Value	CAL45 Type	△L/L : Within ±10%
	LHL□□□	Appearance : No abnormality Inductance change : Within ±10% Q change : Within ±30%
	FBA/FBR	
Test Methods and Remarks	CAL45 Type : Temperature : 40±2℃ Humidity : 90～95%RH Duration : 1000 hrs Applied current : Rated current Recovery : At least 1hr of recovery under the standard removal from test chamber, followed by the measurement within 2hrs. LHL□□□ : Temperature : 40±2℃ Humidity : 90～95%RH Duration : 1000+48/−0 hrs Applied current : Rated current Recovery : 1 to 2hrs of recovery under the standard condition after the removal from the test chamber.	

26. Loading at high temperature		
Specified Value	CAL45 Type	△L/L : Within ±10%
	LHL□□□	
	FBA/FBR	
Test Methods and Remarks	CAL45 Type : Temperature : 85±2℃ Duration : 1000 hrs Applied current : Rated current Recovery : At least 1hr of recovery under the standard removal from test chamber, followed by the measurement within 2hrs.	

27. Low temperature life test		
Specified Value	CAL45 Type	△L/L : Within ±10%
	LHL□□□	Appearance : No abnormality Inductance change : Within ±10% Q change : Within ±30%
	FBA/FBR	
Test Methods and Remarks	CAL45 Type : Temperature : −25±2℃ Duration : 1000 hrs Recovery : At least 1hr of recovery under the standard removal from test chamber, followed by the measurement within 2hrs. LHL□□□ : Temperature :−40±3℃ Duration : 1000+48/−0 hrs Recovery : 1 to 2hrs of recovery under the standard condition after the removal from the test chamber.	

28. High temperature life test		
Specified Value	CAL45 Type	
	LHL□□□	Appearance : No abnormality Inductance change : Within ±10% Q change : Within ±30%
	FBA/FBR	
Test Methods and Remarks	LHL□□□ : Temperature : 105±2℃ Duration : 1000+48/−0 hrs Recovery : 1 to 2hrs of recovery under the standard condition after the removal from the test chamber.	

AXIAL LEADED INDUCTORS(CAL Type)、
RADIAL LEADED INDUCTORS(LH Type)、
LEADED FERRITE BEAD INDUCTORS(FB Series A Type／R Type)

■PRECAUTIONS

1. Circuit Design	
Precautions	◆Operating environment 1. The products described in this specification are intended for use in general electronic equipment,(office supply equipment, telecommunications systems, measuring equipment, and household equipment). They are not intended for use in mission-critical equipment or systems requiring special quality and high reliability (traffic systems, safety equipment, aerospace systems, nuclear control systems and medical equipment including life-support systems,) where product failure might result in loss of life, injury or damage. For such uses, contact TAIYO YUDEN Sales Department in advance.

2. PCB Design	
Precautions	◆Design 1. Please design insertion pitches as matching to that of leads of the component on PCBs.
Technical considerations	◆Design 1. When Inductors are mounted onto a PC board, hole dimensions on the board should match the lead pitch of the component, if not, it will cause breakage of the terminals or cracking of terminal roots covered with resin as excess stress travels through the terminal legs.

3. Considerations for automatic placement	
Precautions	◆Adjustment of mounting machine 1. Excessive impact load should not be imposed on the products when mounting onto the PC boards. 2. Mounting and soldering conditions should be checked beforehand.
Technical considerations	◆Adjustment of mounting machine 1. When installing products, care should be taken not to apply distortion stress as it may deform the products.

4. Soldering	
Precautions	◆Wave soldering 1. Please refer to the specifications in the catalog for a wave soldering. 2. Do not immerse the entire inductor in the flux during the soldering operation. ◆Lead free soldering 1. When using products with lead free soldering, we request to use them after confirming adhesion, temperature of resistance to soldering heat, soldering etc sufficiently. ◆Recommended conditions for using a soldering iron: ・Put the soldering iron on the land-pattern. ・Soldering iron's temperature – Below 350℃ ・Duration – 3 seconds or less ・The soldering iron should not directly touch the inductor. ◆Reflow soldering 1. As for reflow soldering, please contact our sales staff.
Technical considerations	◆Lead free soldering 1. If products are used beyond the range of the recommended conditions, heat stresses may deform the products, and consequently degrade the reliability of the products. ◆Recommended conditions for using a soldering iron If products are used beyond the range of the recommended conditions, heat stresses may deform the products, and consequently degrade the reliability of the products.

5. Cleaning	
Precautions	◆Cleaning conditions 1. CAL type, LH type Please do not do cleaning by a supersonic wave.
Technical considerations	◆Cleaning conditions 1. CAL type, LH type, If washing by supersonic waves, supersonic waves may deform products.

6. Handling	
Precautions	◆Handling 1. Keep the inductors away from all magnets and magnetic objects. ◆Mechanical considerations 1. Please do not give the inductors any excessive mechanical shocks. 2. LH type If inductors are dropped onto the floor or a hard surface they should not be used. ◆Packing 1. Please do not give the inductors any excessive mechanical shocks. In loading, please pay attention to handling indication mentioned in a packing box (a loading direction / number of maximum loading / fragile item).
Technical considerations	◆Handling 1. There is a case that a characteristic varies with magnetic influence. ◆Mechanical considerations 1. There is a case to be damaged by a mechanical shock. 2. LH type There is a case to be broken by a fall. ◆Packing 1. There is a case that a lead wire could be deformed by a fall or an excessive shock.

7. Storage conditions	
Precautions	◆Storage 1. To maintain the solderability of terminal electrodes and to keep the packing material in good condition, temperature and humidity in the storage area should be controlled. Recommended conditions ・Ambient temperature 0～40℃ ・Humidity Below 70% RH The ambient temperature must be kept below 30℃. Even under ideal storage conditions, solderability of products electrodes may decrease as time passes. For this reason, inductors should be used within one year from the time of delivery. In case of storage over 6 months, solderability shall be checked before actual usage.
Technical considerations	◆Storage 1. Under a high temperature and humidity environment, problems such as reduced solderability caused by oxidation of terminal electrodes and deterioration of taping/packaging materials may take place.