有关敝公司产品的注意事项 【高度安全性，可靠性的应用设备（汽车电子设备 / 产业机器）】

请务必在使用敝公司产品之前阅读。

⚠ 注 意

- 本产品目录中所记载的内容为2018年10月之内容。因改良等原因，可能会不经预告而变更记载内容，所以请务必在使用前先确认最新的产品信息。未按照本产品目录中所记载的内容或交货规格说明书使用敝公司产品的，即便其致使使用设备发生损害、瑕疵等时，敝公司也不承担任何责任，敬请悉知。

- 就规格相关的详细内容，敝公司备有交货规格说明书，详情请向敝公司咨询。

- 使用敝公司产品时，请务必事先安装到设备之后，在实际使用的环境下进行评估和确认。

- 本产品目录中所记载的产品可使用于一般电子设备（音像设备、办公自动化设备、家电产品、办公设备、信息/通讯设备）、医疗设备（国际（IMDRF）第一类，第二类）、产业机器、室内电灯等。若考虑将本产品目录中所记载的产品使用于可能会直接危及生命或身体的设备［运输用设备（汽车驱动控制设备、火车控制设备、船舶控制设备等）、交通用信号设备、医疗设备（国际（IMDRF）第三类）］等的，请务必事先向敝公司咨询。

  另外，请勿将敝公司产品使用于对安全性和可靠性要求较高的设备（航天设备、航空设备※、医疗设备（国际（IMDRF）第四类）、原子能控制设备、海底设备、军事设备等）。

  ※ 注释 ： 仅限于对航空设备的安全运行不产生直接干扰的设备[机内娱乐设备、机内照明设备、电动座椅、餐饮设备等]，在满足敝公司另行指定的相关条件时，亦可将敝公司产品用于以上用途。在贵公司考虑将敝公司的产品用于以上用途时，请务必事先向敝公司咨询相关的信息。

  且即便属于一般电子设备，使用于对安全性和可靠性要求较高的设备、电路上时，敝公司建议进行充分的安全评估，并根据需要，在设计时追加保护电路等。

  未经敝公司的事先书面同意，把本产品目录中所记载的产品使用于前述需要向敝公司咨询的设备或敝公司禁止使用的设备，从而给客户或第三方造成损害的，敝公司不承担任何责任，敬请悉知。

- 本产品目录中所记载的信息是用于说明相关产品的典型操作以及相关应用。此类信息的使用不代表对于敝公司以及第三方的知识产权以及其他权利的使用许可或是不侵权保证。

- 敝公司产品的保证范围仅限于交付的敝公司产品单品，就敝公司产品的故障或瑕疵所诱发的损害，敝公司不承担任何责任，敬请悉知。但是，以书面形式另行签署了交易基本合同书，品质保证协定书等时，敝公司将根据该合同等的条件提供保证。

- 本产品目录中所记载的内容适用于从敝公司营业所、销售子公司、销售代理店（即“正规销售渠道”）购买的敝公司产品，并不适用于从上述以外的渠道购买的敝公司产品，敬请悉知。

- 出口相关注意事项
  本产品目录中所记载的部分产品在出口时须事先确认《外汇和对外贸易法》以及美国出口管理的相关法规，并办理相关手续。如有不明之处，请向敝公司咨询。

车载用途使用指引

敝公司将汽车用电子设备划分为如下四个分类。而对于敝司的每个产品，敝公司都设定了其可以被使用的分类。需在汽车用电子设备上使用敝公司的产品之前，请一定要事先确认该产品是否适合使用在该用途上。如有不明之处，请与敝公司取得联系。

分　类	汽车用电子设备 (代表实例)
控制系	・发动机引擎控制装置 (ECU) ・巡航定速控制装置 ・四轮转向系统 (4WS) ・自动变速箱 (AT) ・动力转向装置 ・HEV/PHV/EV 基础控制 (电池 / 逆变器 /DC-DC) ・汽车定位器 (车辆位置情报提供装置)　　等
安全系	・防锁死刹车系统 (ABS) ・车身动态稳定系统 (ESC) ・安全气囊 ・ADAS (直接控制走动 / 转向 / 停车的装置)　　等
车身系	・雨刷 ・自动门锁 ・电动车窗 ・无钥匙进入系统 (智能钥匙) ・电动后视镜 ・车内照明 ・LED 车头 / 车尾灯 ・轮胎压力监测系统 (TPMS) ・防盗装置　　等
情报系	・车载信息娱乐装置 (汽车导航 / 音响等) ・情报通讯装置 (ITS/T-BOX) ・汽车仪表 ・ADAS (与传感 , 安全 / 传动系统没有关联的装置)　　等

▶ 由于篇幅有限，本产品目录中只记载了有代表性的产品规格，若考虑使用弊司产品时，请确认交货规格说明书中的详细规格。
另外，有关各产品的详细信息(特性图、可靠性信息、使用时的注意事项等)，请参阅弊司网站(http://www.ty-top.com/)。

SMD 功率电感器(NR系列 M型)

回流焊

AEC-Q200

AEC-Q200 Grade 2 (在2级测试条件下已完成评估。)
使用环境温度：-40～105℃

■型号标示法

*使用温度范围：-40～125℃ (包括本身发热)

N R M	6 0 4 5	T △	1 0 0	M	△ R △	V
①	②	③	④	⑤	⑥	⑦

△＝空格

①类型

代码	类型
NRM	外装树脂规格

②尺寸 (L×W×H)

代码	尺寸 (L×W×H) [mm]
6045	6.0×6.0×4.5

③包装

代码	包装
T△	卷盘带装

④标称电感值

代码 (例)	标称电感值 [μH]
2R2	2.2
100	10
102	1000

※R＝小数点

⑤电感量公差

代码	电感量公差
M	±20%
N	±30%

⑥个别规格

代码	个别规格
△R△	标准

⑦本公司管理标记

代码	本公司管理标记
V	车内用途

■标准外型尺寸 / 标准数量

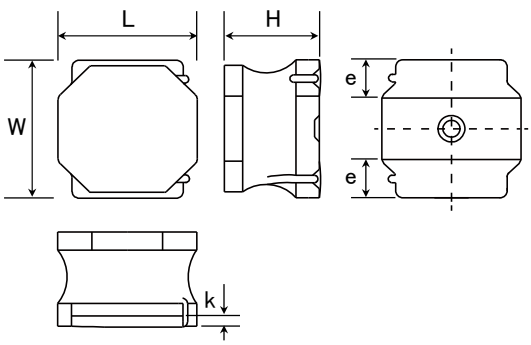

推荐焊盘图案

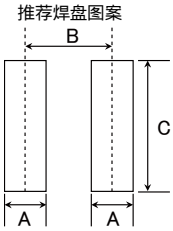

Type	A	B	C
NRM6045	2.4	5.0	4.8

单位: mm

Type	L	W	H	e	k (参考值)	标准数量 [pcs] 卷盘带装
NRM6045	6.0±0.2 (0.236±0.008)	6.0±0.2 (0.236±0.008)	4.5 max (0.177 max)	1.65±0.3 (0.053±0.012)	0.3 min (0.012 min)	1500

单位: mm (inch)

▶由于篇幅有限，本产品目录中只记载了有代表性的产品规格，若考虑使用弊司产品时，请确认交货规格说明书中的详细规格。
另外，有关各产品的详细信息(特性图、可靠性信息、使用时的注意事项等)，请参阅弊司网站(http://www.ty-top.com/)。

■型号一览

・产品目录中的SMD功率电感器全部属于RoHS对应品。

注)
・根据使用电路和机器，需要按照相应规格处理。请务必咨询正规销售渠道。
・*1：车载(车身系・情报系)用途(AEC-Q200 Qualified)的产品。有关更多的内容,请务必于“车载用途使用指引”中确认。
＜ AEC-Q200 ：AEC-Q200 qualified＞
标注*1的SMD功率电感器，已就其代表性产品实施了对应AEC-Q200标准的评价测试。
关于本产品的详细规格和评估测试结果等信息，请咨询官方销售渠道。
此外，订购时请索取产品规格书。
・*2：面向工业设备、医疗设备的产品。

●NRM6045

型号	标称电感值 [μH]	电感量公差	直流电阻 [mΩ] Max (Typ)	额定电流 ※) [mA]			测试频率 [MHz]	注释
				直流重叠允许电流 Idc1 Max (Typ)	温度上升允许电流① Idc2 Max (Typ)	温度上升允许电流② Idc2 Max (Typ)		
NRM6045T 1R0N R V	1	±30%	13 (10)	14.00 (14.50)	4.00 (6.00)	6.20 (7.00)	0.1	*1, *2
NRM6045T 2R2N R V	2.2	±30%	28 (23)	8.50 (9.50)	3.00 (4.00)	4.40 (5.10)	0.1	*1, *2
NRM6045T 4R7M R V	4.7	±20%	42 (35)	6.10 (6.80)	2.20 (3.00)	3.60 (3.90)	0.1	*1, *2
NRM6045T 100M R V	10	±20%	60 (50)	3.40 (3.90)	1.80 (2.40)	2.60 (3.00)	0.1	*1, *2
NRM6045T 220M R V	22	±20%	145 (120)	1.80 (2.10)	1.20 (1.60)	1.80 (1.95)	0.1	*1, *2
NRM6045T 470M R V	47	±20%	370 (280)	1.40 (1.55)	0.70 (0.90)	1.20 (1.30)	0.1	*1, *2
NRM6045T 101M R V	100	±20%	600 (500)	0.95 (1.05)	0.55 (0.70)	0.85 (0.95)	0.1	*1, *2
NRM6045T 221M R V	220	±20%	1320 (1100)	0.65 (0.70)	0.35 (0.50)	0.57 (0.65)	0.1	*1, *2
NRM6045T 471M R V	470	±20%	2760 (2300)	0.45 (0.50)	0.22 (0.30)	0.38 (0.45)	0.1	*1, *2
NRM6045T 102M R V	1000	±20%	5900 (4900)	0.31 (0.35)	0.15 (0.20)	0.26 (0.30)	0.1	*1, *2

※) 直流重叠允许电流(Idc1)为直流重叠带来的电感值下降，范围在 30%以内的直流电感值(at 20℃)
※) 温度上升容许电流(Idc2)①是指温度上升为20℃的直流电流值(at 20℃)
※) 温度上升容许电流(Idc2)②是指温度上升为40℃的直流电流值(at 20℃)
※) 温度上升容许电流(Idc2)②是参考值
※) 最大额定电流为能够满足直流重叠允许电流和温度上升允许电流的直流电流值

■降低额定电流值

●N R系列 M型
N R系列 M 型需要根据周围温度降低额定电流值。
请参照下图降低使用电流的额定值。

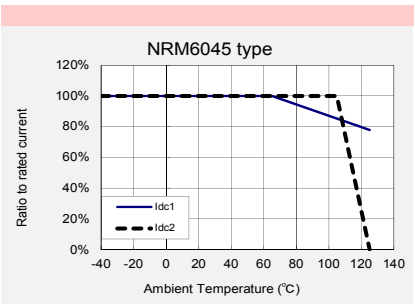

■PACKAGING

①Minimum Quantity

Type	Standard Quantity [pcs]
	Tape & Reel
NRV2010	2500
NRS2012 NRV2012	2500
NRH2410	2500
NRH2412	2500
NR 3010 NRH3010	2000
NR 3012 NRH3012 NRV3012	2000
NR 3015 NRS3015	2000
NR 4010 NRS4010	5000
NR 4012 NRS4012	4500
NR 4018 NRS4018	3500

Type	Standard Quantity [pcs]
	Tape & Reel
NRS5010	1000
NRS5012	1000
NRS5014	1000
NRS5020	800
NRS5024	2500
NRS5030	500
NR 5040 NRS5040	1500
NRS6010	1000
NR 6012 NRS6012	1000
NRS6014	1000
NR 6020 NRS6020	2500
NR 6028 NRS6028	2000
NR 6045 NRM6045 NRS6045	1500
NRS8030	1000
NR 8040 NRS8040	1000

②Tape Material

●Embossed Tape

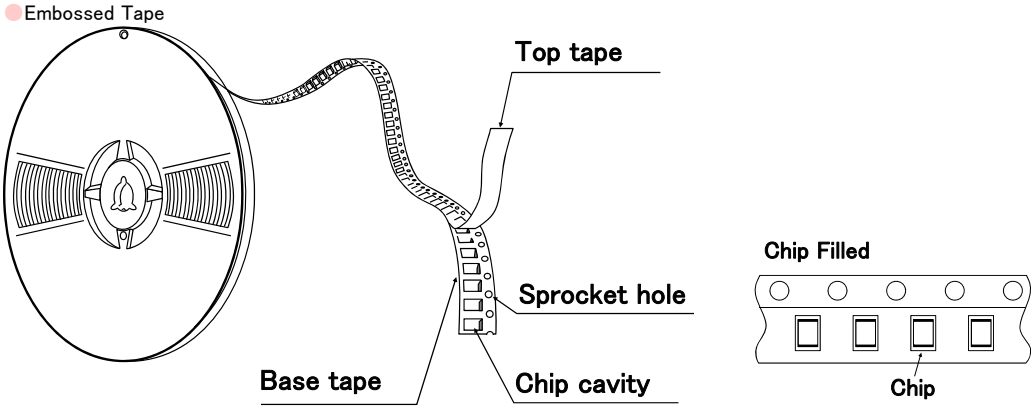

③Taping dimensions

●Embossed tape 8mm wide (0.315 inches wide)

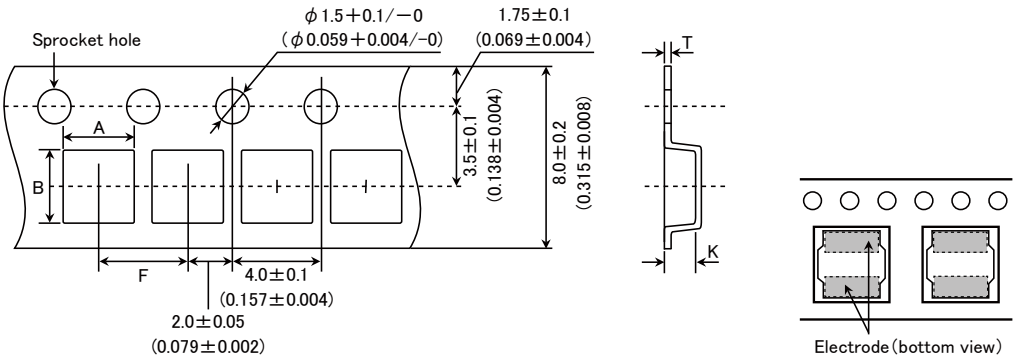

▶ This catalog contains the typical specification only due to the limitation of space. When you consider the purchase of our products, please check our specification.
For details of each product (characteristics graph, reliability information, precautions for use, and so on), see our Web site (http://www.ty-top.com/) .

Type	Chip cavity		Insertion pitch	Tape thickness	
	A	B	F	T	K
NRV2010 NRS2012 NRV2012	2.2±0.1 (0.102±0.004)	2.2±0.1 (0.102±0.004)	4.0±0.1 (0.157±0.004)	0.25±0.05 (0.009±0.002)	1.3±0.1 (0.051±0.004)
NRH2410 NRH2412	2.6±0.1 (0.087±0.004)	2.6±0.1 (0.102±0.004)		0.25±0.05 (0.009±0.002)	1.3±0.1 (0.051±0.004)
NR 3010 NRH3010	3.2±0.1 (0.126±0.004)	3.2±0.1 (0.126±0.004)		0.3±0.05 (0.012±0.002)	1.4±0.1 (0.055±0.004)
NR 3012 NRH3012 NRV3012					1.6±0.1 (0.063±0.004)
NR 3015 NRS3015					1.9±0.1 (0.075±0.004)

Unit：mm(inch)

Embossed tape 12mm wide (0.47 inches wide)

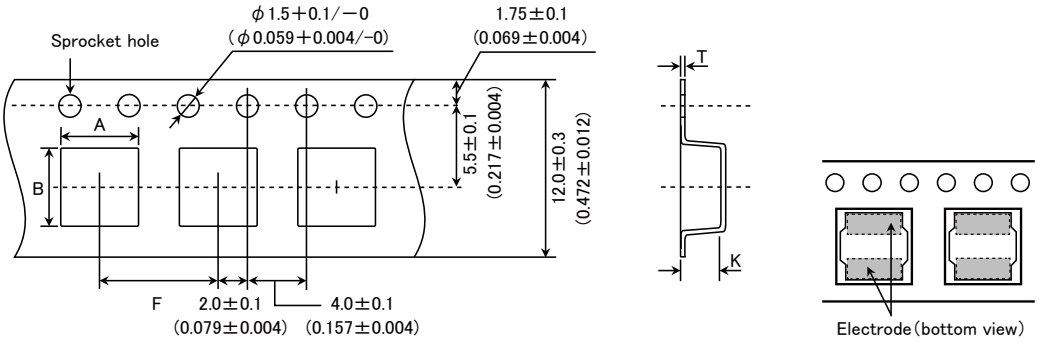

Type	Chip cavity		Insertion pitch	Tape thickness	
	A	B	F	T	K
NR 4010 NRS4010	4.3±0.1 (0.169±0.004)	4.3±0.1 (0.169±0.004)	8.0±0.1 (0.315±0.004)	0.3±0.1 (0.012±0.004)	1.4±0.1 (0.055±0.004)
NR 4012 NRS4012					1.6±0.1 (0.063±0.004)
NR 4018 NRS4018					2.1±0.1 (0.083±0.004)
NRS5010	5.25±0.1 (0.207±0.004)	5.25±0.1 (0.207±0.004)			1.4±0.1 (0.055±0.004)
NRS5012					1.4±0.1 (0.055±0.004)
NRS5014					1.6±0.1 (0.063±0.004)
NRS5020					2.3±0.1 (0.091±0.004)
NRS5024					2.7±0.1 (0.106±0.004)
NRS5030	5.15±0.1 (0.203±0.004)	5.15±0.1 (0.203±0.004)		0.4±0.1 (0.016±0.004)	3.2±0.1 (0.126±0.004)
NR 5040 NRS5040	5.15±0.1 (0.203±0.004)	5.15±0.1 (0.203±0.004)			4.2±0.1 (0.165±0.004)
NRS6010	6.3±0.1 (0.248±0.004)	6.3±0.1 (0.248±0.004)			1.4±0.1 (0.055±0.004)
NR 6012 NRS6012					1.6±0.1 (0.063±0.004)
NRS6014					1.6±0.1 (0.063±0.004)
NR 6020 NRS6020					2.3±0.1 (0.090±0.004)
NR 6028 NRS6028					3.1±0.1 (0.122±0.004)
NR 6045 NRM6045 NRS6045					4.7±0.1 (0.185±0.004)

Unit：mm(inch)

▶ This catalog contains the typical specification only due to the limitation of space. When you consider the purchase of our products, please check our specification.
For details of each product (characteristics graph, reliability information, precautions for use, and so on), see our Web site (http://www.ty-top.com/) .

●Embossed tape 16mm wide (0.63 inches wide)

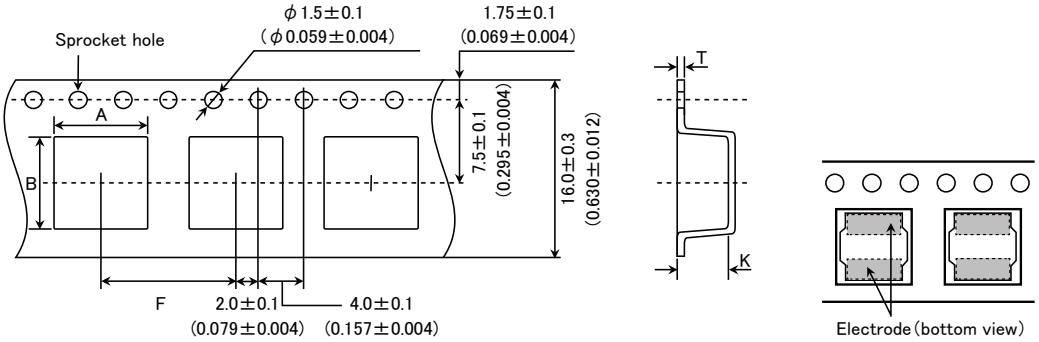

Type	Chip cavity		Insertion pitch	Tape thickness	
	A	B	F	T	K
NRS8030	8.3±0.1 (0.327±0.004)	8.3±0.1 (0.327±0.004)	12.0±0.1 (0.472±0.004)	0.5±0.1 (0.020±0.004)	3.4±0.1 (0.134±0.004)
NR 8040 NRS8040					4.5±0.1 (0.177±0.004)

Unit : mm (inch)

④Leader and Blank portion

●NR, NRH, NRS, NRV

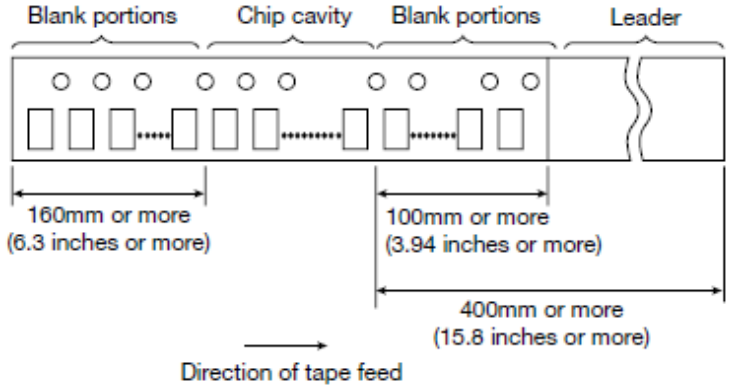

⑤Reel size

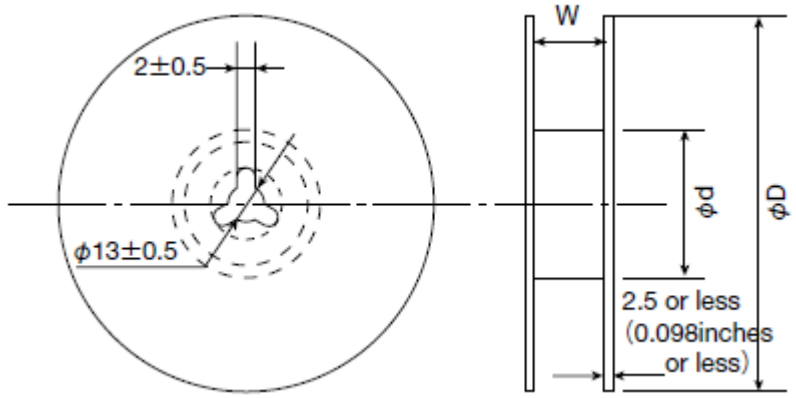

Type	Reel size (Reference values)		
	φD	φd	W
NRV2010 NRS2012 NRV2012 NRH2410 NRH2412 NR 3010 NRH3010 NR 3012 NRH3012 NRV3012 NR 3015 NRS3015	180±0.5 (7.087±0.019)	60±1.0 (2.36±0.04)	10.0±1.5 (0.394±0.059)

▸ This catalog contains the typical specification only due to the limitation of space. When you consider the purchase of our products, please check our specification.
For details of each product (characteristics graph, reliability information, precautions for use, and so on), see our Web site (http://www.ty-top.com/) .

NRS5010	180±3.0 (7.087±0.118)	60±2.0 (2.36±0.08)	14.0±1.5 (0.551±0.059)
NRS5012			
NRS5014			
NRS5020			
NRS5030			
NRS6010			
NR 6012 NRS6012			
NRS6014			

Unit : mm (inch)

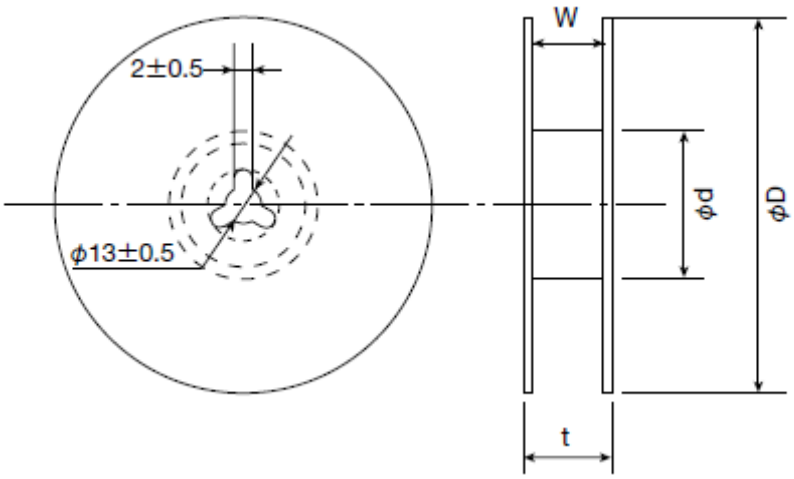

Type	Reel size (Reference values)			
	φD	φd	t (max.)	W
NR 4010 NRS4010	330±3.0 (12.99±0.118)	80±2.0 (3.15±0.078)	18.5 (0.72)	13.5±1.0 (0.531±0.04)
NR 4012 NRS4012				
NR 4018 NRS4018				
NRS5024				
NR 5040 NRS5040				
NR 6020 NRS6020				
NR 6028 NRS6028				
NR 6045 NRM6045 NRS6045				
NRS8030			22.5 (0.89)	17.5±1.0 (0.689±0.04)
NR 8040 NRS8040				

Unit : mm (inch)

⑥Top Tape Strength

The top tape requires a peel-off force of 0.1 to 1.3N in the direction of the arrow as illustrated below.

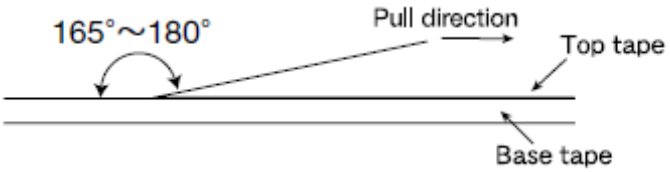

▸ This catalog contains the typical specification only due to the limitation of space. When you consider the purchase of our products, please check our specification.
For details of each product (characteristics graph, reliability information, precautions for use, and so on), see our Web site (http://www.ty-top.com/) .

■RELIABILITY DATA

1. Operating Temperature Range		
Specified Value	NRV20/30Type,NRH24/30Type NRS20/30/40/50/60/80Type	－40～＋125℃(Including self-generated heat)
Test Methods and Remarks	Including self-generated heat	

2. Storage Temperature Range		
Specified Value	NRV20/30Type,NRH24/30Type NRS20/30/40/50/60/80Type	－40～＋85℃
Test Methods and Remarks	－5 to 40℃ for the product with taping.	

3. Rated current		
Specified Value	NRV20/30Type,NRH24/30Type NRS20/30/40/50/60/80Type	Within the specified tolerance

4. Inductance		
Specified Value	NRV20/30Type,NRH24/30Type NRS20/30/40/50/60/80Type	Within the specified tolerance
Test Methods and Remarks	Measuring equipment : LCR Meter（HP 4285A or equivalent） Measuring frequency : 100kHz, 1V	

5. DC Resistance		
Specified Value	NRV20/30Type,NRH24/30Type NRS20/30/40/50/60/80Type	Within the specified tolerance
Test Methods and Remarks	Measuring equipment : DC ohmmeter（HIOKI 3227 or equivalent）	

6. Self resonance frequency		
Specified Value	NRV30Type,NRH24/30Type NRS30/40/50/60/80Type	Within the specified tolerance
	NRV20,NRS20	－
Test Methods and Remarks	NRV30,NRH24/30,NRS30/40/50/60/80Type Measuring equipment : Impedance analyzer/material analyzer(HP4291A or equivalent HP4191A, 4192A or equivalent)	

7. Temperature characteristic		
Specified Value	NRV20/30Type,NRH24/30Type NRS20/30/40/50/60/80Type	Inductance change : Within ±20%
Test Methods and Remarks	NRV20/30, NRH24/30, NRS20/30/40/50/60/80 Type, : Measurement of inductance shall be taken at temperature range within －40℃～＋85℃. With reference to inductance value at ＋20℃., change rate shall be calculated. Change of maximum inductance deviation in step 1 to 5	

Step	Temperature(℃)
1	20
2	Minimum operating temperature
3	20 (Standard temperature)
4	Maximum operating temperature
5	20

▸ This catalog contains the typical specification only due to the limitation of space. When you consider the purchase of our products, please check our specification.
For details of each product (characteristics graph, reliability information, precautions for use, and so on), see our Web site (http://www.ty-top.com/) .

8. Resistance to flexure of substrate

Specified Value	NRV20/30Type,NRH24/30Type NRS20/30/40/50/60/80Type	No damage

Test Methods and Remarks

The test samples shall be soldered to the test board by the reflow. As illustrated below, apply force in the direction of the arrow indicating until deflection of the test board reaches to 2 mm.

Test board size : 100×40×1.0
Test board material : glass epoxy-resin
Solder cream thickness : 0.10mm (NRS20/30, NRH24/30, NRV20/30Type)
: 0.15mm (NRS40/50/60/80Type)

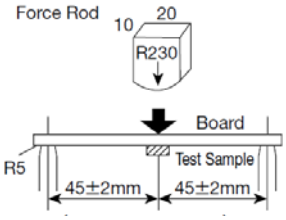

Land dimension

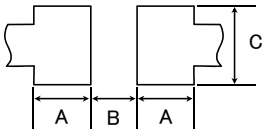

Type	A	B	C
NRS20, NRV20	0.65	0.7	2.0
NRH24	0.7	0.75	2.0
NRV30,NRH30,NRS30	0.8	1.4	2.7
NRS40	1.2	1.6	3.7
NRS50	1.5	2.1	4.0
NRS60	1.6	3.1	5.7
NRS80	1.8	3.8	7.5

9. Insulation resistance : between wires

Specified Value	NRV20/30Type,NRH24/30Type NRS20/30/40/50/60/80Type	—

10. Insulation resistance : between wire and core

Specified Value	NRV20/30Type,NRH24/30Type NRS20/30/40/50/60/80Type	—

11. Withstanding voltage : between wire and core

Specified Value	NRV20/30Type,NRH24/30Type NRS20/30/40/50/60/80Type	—

12. Adhesion of terminal electrode

Specified Value	NRV20/30Type,NRH24/30Type NRS20/30/40/50/60/80Type	Shall not come off PC board

Test Methods and Remarks

The test samples shall be soldered to the test board by the reflow.

Applied force : 10N to X and Y directions.
Duration : 5s.
Solder cream thickness : 0.10mm(NRV20/30Type,NRH24/30type,NRS20/30Type)
: 0.15mm(NRS40/50/60/80Type)

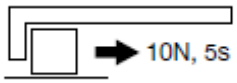

13. Resistance to vibration

Specified Value	NRV20/30Type,NRH24/30Type NRS20/30/40/50/60/80Type	Inductance change : Within ±10% No significant abnormality in appearance.

Test Methods and Remarks

The test samples shall be soldered to the test board by the reflow.
Then it shall be submitted to below test conditions.

Frequency Range	10～55Hz	
Total Amplitude	1.5mm (May not exceed acceleration 196m/s^2)	
Sweeping Method	10Hz to 55Hz to 10Hz for 1min.	
Time	X	For 2 hours on each X, Y, and Z axis.
	Y	
	Z	

Recovery : At least 2hrs of recovery under the standard condition after the test, followed by the measurement within 48hrs.

14. Solderability

Specified Value	NRV20/30Type,NRH24/30Type NRS20/30/40/50/60/80Type	At least 90% of surface of terminal electrode is covered by new solder.
Test Methods and Remarks	The test samples shall be dipped in flux, and then immersed in molten solder as shown in below table. Flux : Methanol solution containing rosin 25%. Solder Temperature: 245±5℃ Time: 5±1.0 sec. ※Immersion depth : All sides of mounting terminal shall be immersed.	

15. Resistance to soldering heat

Specified Value	NRV20/30Type,NRH24/30Type NRS20/30/40/50/60/80Type	Inductance change : Within ±10% No significant abnormality in appearance.
Test Methods and Remarks	The test sample shall be exposed to reflow oven at 230±5℃ for 40 seconds, with peak temperature at 260±5℃ for 5 seconds, 2 times. Test board material : glass epoxy-resin Test board thickness : 1.0mm	

16. Thermal shock

Specified Value	NRV20/30Type,NRH24/30Type NRS20/30/40/50/60/80Type	Inductance change : Within ±10% No significant abnormality in appearance.
Test Methods and Remarks	The test samples shall be soldered to the test board by the reflow. The test samples shall be placed at specified temperature for specified time by step 1 to step 4 as shown in below table in sequence. The temperature cycle shall be repeated 1000 cycles.	

Conditions of 1 cycle		
Step	Temperature (℃)	Duration (min)
1	−40±3	30±3
2	Room temperature	Within 3
3	+85±2	30±3
4	Room temperature	Within 3

17. Damp heat

Specified Value	NRV20/30Type,NRH24/30Type NRS20/30/40/50/60/80Type	Inductance change : Within ±10% No significant abnormality in appearance.
Test Methods and Remarks	The test samples shall be soldered to the test board by the reflow. The test samples shall be placed in thermostatic oven set at specified temperature and humidity as shown in below table.	

Temperature	60±2℃
Humidity	90～95%RH
Time	1000+24/−0 hour

18. Loading under damp heat

Specified Value	NRV20/30Type,NRH24/30Type NRS20/30/40/50/60/80Type	Inductance change : Within ±10% No significant abnormality in appearance.
Test Methods and Remarks	The test samples shall be soldered to the test board by the reflow. The test samples shall be placed in thermostatic oven set at specified temperature and humidity and applied the rated current continuously as shown in below table.	

Temperature	60±2℃
Humidity	90～95%RH
Applied current	Rated current
Time	1000+24/−0 hour

19. Low temperature life test

Specified Value	NRV20/30Type,NRH24/30Type NRS20/30/40/50/60/80Type	Inductance change : Within ±10% No significant abnormality in appearance.
Test Methods and Remarks	The test samples shall be soldered to the test board by the reflow. After that, the test samples shall be placed at test conditions as shown in below table.	

Temperature	−40±2℃
Time	1000+24/−0 hour

20. High temperature life test		
Specified Value	NRV20/30Type,NRH24/30Type NRS20/30/40/50/60/80Type	—

21. Loading at high temperature life test		
Specified Value	NRV20/30Type,NRH24/30Type NRS20/30/40/50/60/80Type	Inductance change : Within ±10% No significant abnormality in appearance.
Test Methods and Remarks	The test samples shall be soldered to the test board by the reflow soldering. Temperature: 85±2℃ Applied current: Rated current Time: 1000+24/−0 hour	

22. Standard condition		
Specified Value	NRV20/30Type,NRH24/30Type NRS20/30/40/50/60/80Type	Standard test condition : Unless otherwise specified, temperature is 20±15℃ and 65±20%of relative humidity. When there is any question concerning measurement result: In order to provide correlation data, the test shall be condition of 20±2℃ of temperature, 65±5% relative humidity. Inductance is in accordance with our measured value.

■PRECAUTIONS

1. Circuit Design	
Precautions	◆Operating environment 1. The products listed in this catalogue are intended for use in general electronic equipment (e.g., AV equipment, OA equipment, home electric appliances, office equipment, information and communication equipment), general medical equipment, industrial equipment, and automotive interior applications, etc. Please be sure to contact TAIYO YUDEN for further information before using the products for any equipment which may directly cause loss of human life or bodily injury (e.g., specially controlled medical equipment, transportation equipment including, without limitation, automotive powertrain control system, train control system, and ship control system, traffic signal equipment). Please do not incorporate our products into any equipment requiring high levels of safety and/or reliability (e.g., aerospace equipment, aviation equipment, nuclear control equipment, undersea equipment, military equipment, etc.).

2. PCB Design	
Precautions	◆Land pattern design 1. Please refer to a recommended land pattern. 2. There is stress, which has been caused by distortion of a PCB, to the inductor. (NRV20/30, NRH24/30, NRS20/30/40/50/60/80, NRM60 Type) 3. Please consider the arrangement of parts on a PCB. (NRV20/30, NRH24/30, NRS20/30/40/50/60/80, NRM60 Type)
Technical considerations	◆Land pattern design Surface Mounting 1. Mounting and soldering conditions should be checked beforehand. 2. Applicable soldering process to this products is reflow soldering only. 3. Please use the recommended land pattern shown as below. Electrical characteristics and the mounting ability of the product are being considered in the recommended land pattern. If a PCB is designed with other dimensions, defective soldering and stress to a product may occur due to misalignment. The performance of the product may not be brought out. If an adopted land pattern is different from the recommended land pattern, stress to the product will increase. It may cause cracks or defective electrical characteristics of the product. Please conduct validation completely before studying adoption of this product and please judge the pros and cons of adoption of this product with taking on responsibility. (NR30/40/50/60/80, NRV20/30, NRH24/30, NRS20/30/40/50/60/80, NRM60 Type) 4. As coefficients of thermal expansion between an inductor and a PCB differs, cracks may occur on a ferrite core when thermal stress is applied to them after mounting an inductor. (Please refer to the drawings below.) Please conduct validation completely before studying adoption of this product and please judge the pros and cons of adoption of this product with taking on responsibility. (NRV20/30, NRH24/30, NRS20/30/40/50/60/80, NRM60 Type) 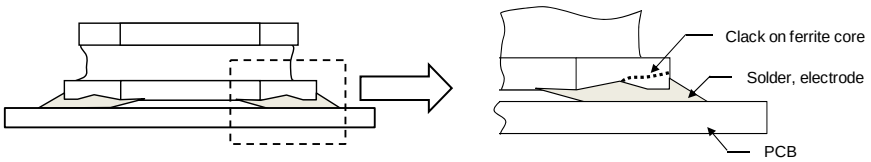 5. SMD inductors should be located to minimize any possible mechanical stresses from board warp or deflection. When splitting the PC board after mounting inductors and other components, care is required so as not to give any stresses of deflection or twisting to the board. (NRV20/30, NRH24/30, NRS20/30/40/50/60/80, NRM60 Type) 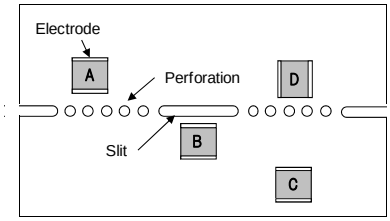 A product tends to undergo stress in order “A>C>B≡D”. Please consider the layouts of a product to minimize any stresses.

3. Considerations for automatic placement

Precautions	◆Adjustment of mounting machine 1. Excessive impact load should not be imposed on the products when mounting onto the PC boards. 2. Mounting and soldering conditions should be checked beforehand.
Technical considerations	◆Adjustment of mounting machine 1. When installing products, care should be taken not to apply distortion stress as it may deform the products. 2. Stress may be applied to a product with a warp or a twist in handling of the product. Please conduct validation completely before studying adoption of this product and please judge the pros and cons of adoption of this product with taking on responsibility. (NRV20/30, NRH24/30, NRS20/30/40/50/60/80, NRM60 Type)

4. Soldering

Precautions	◆Reflow soldering 1. Please contact any of our offices for a reflow soldering, and refer to the recommended condition specified. 2. The product shall be used reflow soldering only. 3. Please do not add any stress to a product until it returns in normal temperature after reflow soldering. ◆Lead free soldering 1. When using products with lead free soldering, we request to use them after confirming adhesion, temperature of resistance to soldering heat, soldering etc sufficiently. ◆Recommended conditions for using a soldering iron ・ Put the soldering iron on the land-pattern. ・ Soldering iron's temperature – Below 350℃ ・ Duration – 3 seconds or less ・ The soldering iron should not directly touch the inductor.
Technical considerations	◆Reflow soldering 1. If products are used beyond the range of the recommended conditions, heat stresses may deform the products, and consequently degrade the reliability of the products. ・ NRV20/30, NRH24/30, NRS20/30/40/50/60/80, NRM60 Type, NS101/125 Type, EST0645/1040/1060 Type Recommended reflow condition (Pb free solder) NR, NS Series 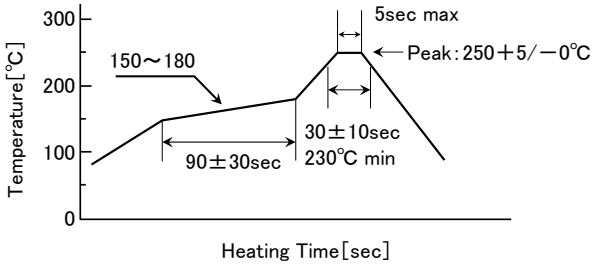 ES Series 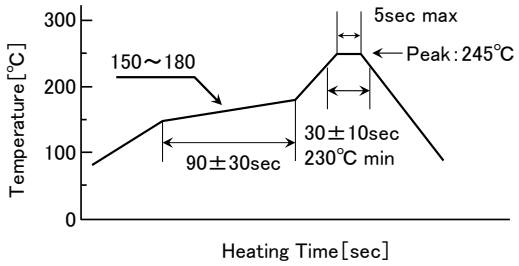

5. Cleaning

Precautions	◆Cleaning conditions 1. Washing by supersonic waves shall be avoided.
Technical considerations	◆Cleaning conditions 1. If washed by supersonic waves, the products might be broken.

6. Handling

Precautions	◆Handling 1. Keep the product away from all magnets and magnetic objects. ◆Breakaway PC boards (splitting along perforations) 1. When splitting the PC board after mounting product, care should be taken not to give any stresses of deflection or twisting to the board. 2. Board separation should not be done manually, but by using the appropriate devices. ◆Mechanical considerations 1. Please do not give the product any excessive mechanical shocks. 2. Please do not add any shock and power to a product in transportation. ◆Pick-up pressure 1. Please do not push to add any pressure to a winding part. Please do not give any shock and push into a ferrite core exposure part. ◆Packing 1. Please avoid accumulation of a packing box as much as possible.
Technical considerations	◆Handling 1. There is a case that a characteristic varies with magnetic influence. ◆Breakaway PC boards (splitting along perforations) 1. The position of the product on PCBs shall be carefully considered to minimize the stress caused from splitting of the PCBs. ◆Mechanical considerations 1. There is a case to be damaged by a mechanical shock. 2. There is a case to be broken by the handling in transportation. ◆Pick-up pressure 1. Damage and a characteristic can vary with an excessive shock or stress. ◆Packing 1. If packing boxes are accumulated, that could cause a deformation on packing tapes or a damage on the products.

7. Storage conditions	
Precautions	◆Storage 1. To maintain the solderability of terminal electrodes and to keep the packing material in good condition, temperature and humidity in the storage area should be controlled. ・ Recommended conditions Ambient temperature : －5～40℃ Humidity : Below 70% RH ・ The ambient temperature must be kept below 30℃. Even under ideal storage conditions, solderability of products electrodes may decrease as time passes. For this reason, product should be used within 6 months from the time of delivery. In case of storage over 6 months, solderability shall be checked before actual usage.
Technical considerations	◆Storage 1. Under a high temperature and humidity environment, problems such as reduced solderability caused by oxidation of terminal electrodes and deterioration of taping/packaging materials may take place.